GENTEC

LEAD FREE BRASS PRODUCT SPECIFICATION CATALOGUE

gentecaustralia.com.au

LEAD FREE BRASS

- This Brass products category is compliant with ABCB's requirements for lead-free of less than a weighted average lead content of 0.25%, allowable by ABCB's requirements
- Watermark Certification (when applicable)
- WELS rated
- DZR Brass
- Chrome plated / other finishes available on request
- Comprehensive range available

ABOUT GENTEC

At GENTEC, we focus on partnering with plumbing and building industries to develop and deliver innovative and compliant technical plumbing and building solutions for use within the healthcare, hospitality, commercial, educational and industrial sectors. We are an ISO9001 Quality Certified company. We distribute our commercial tapware, sanitaryware, water temperature control, building management, emergency shower and accessible design performance solutions both in Australia and internationally.

Our highly trained and committed team offers a superior support network that enables us to deliver the very best solutions in a highly efficient and responsive manner. GENTEC embraces and promotes a strong family culture where personal growth and development is nurtured and valued.

Our purpose-built design solutions encompass measurable whole of life cost benefits that enable operational savings critical in today's built environment.

The more stars the more water efficient
WATER RATING
www.waterrating.gov.au
6.0 litres per minute
In accordance with AS/NZS 6400
Licence No. 1334
GENTEC AUSTRALIA

Lead Free
AS 3718
Lic WM 74827
ApprovalMark

Lead Free Certification
ApprovalMark International

ISO 9001
Certified
ApprovalMark

Gas Safety
Certified
GAS40068

Note: The information provided is only a guide, actual product may differ. The information here should not be relied on without clarification with Gentec. Gentec reserves the right to make design changes at any time without notification.
*Subject to terms and conditions, available at https://gentecaustralia.com.au/terms-and-conditions/

PRODUCT SOLUTIONS FOR ALL

Designed to Suit Your Needs

GENTEC products have been specially designed for target markets within the commercial industry. These markets have been chosen, so the ranges complement each other and the users can find complete solutions within the GENTEC Range.

Healthcare Risk Prevention Solutions

Hospitals
Aged Care
Medical Clinics
Research Facilities
Accessible Facilities

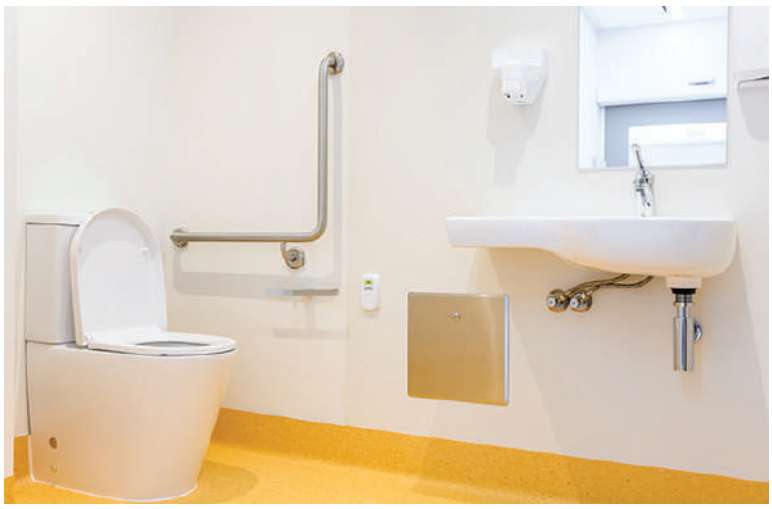

Our extensive experience and know-how enable us to offer a comprehensive suite of products and solutions for Health and Aged Care applications. We work closely with all the key stakeholders in the health care sector, which gives us a thorough understanding of the critical elements needed to mitigate cross infection and microbial control.

Commercially Fit-for-purpose Solutions

Hotels
Education
Office Buildings
Shopping Centres
Sporting Facilities

High-traffic public facilities demand fit-for-purpose vandal resistant solutions that continue to perform day in and day out with minimal downtime. At GENTEC, understanding the demanding need for safe, effective solutions with designs and technology that embody a strong service life is at the core of our offerings. Water and energy efficiency is additionally combined into solutions that are fit for today's increasing hygiene demands within commercial facilities.

Hospitality Commercial Products Solutions

Restaurants
Hotels & Clubs
Sporting Facilities
Commercial Kitchens

GENTEC's functional and comprehensive range of solutions for hospitality and food preparation applications have been designed and manufactured for those that demand premium quality fitout of their facilities. Hygiene and performance are critical within this space. At GENTEC, our fit-for-purpose solutions from pre-rinse sprays, touch-free outlets through to water temperature control for safe and hygienic hand washing mesh perfectly together along with superior service life.

Professional & School Laboratory Solutions

Educational Facilities
Mining
Universities
Laboratories
Medical Facilities

Our extensive GENTEC product range offers a variety of option to suit any specific application you may require. The DURALAB range includes bench, pendant or wall systems with services ranging from water to any gas or dry services. This range is complimented by our ECOSAFE safety shower range to provide a complete solution for any scientific scenario.

Health & Safety Solutions for Industrial Applications

Mining
Refineries
Laboratories
Manufacturing
Chemical Plants

Workplace Health and Safety is critical in any workplace. Whilst mitigating risks through the application of sound procedures and processes, many workplaces require the additional use of first response equipment such as emergency showers and eyewash. At GENTEC, our fit-for-purpose compliant solutions are perfectly suited for commercial, industrial, and mining applications that mandate such products for the protection of their workforce who may be exposed to hazardous materials during their day-to-day activities.

Corrections/ Mental Health Solutions

Hospitals
Aged Care Facilities
Corrective Facilities
Police Stations
Public Facilities

We have a range of robust products for use at Corrections/ Mental Health facilities. These products provide the highest level of security with the use of vandal resistant and anti-ligature features. These are easy to use and clean, while providing water and energy savings.

CLEANLINE LEAD FREE BRASS

CLEANLINE Lead Free Brass Lever Tapware features a ceramic disc cartridge for precise water flow control and no crevices to eliminate bacterial build-up. The range is customisable with interchangeable handles and comes with button indicators. Recommended for health and aged care projects.

CLEANLINE LEAD FREE BRASS

BASIN & SINK SETS

Technical Information

- Material:
  - Body: Lead Free DZR Brass
  - Handle: Brass
- **Cartridge:** Ceramic Disc (Quarter Turn)
- **Cartridge Size:** 5/8''
- **Inlet:** 15mm
- Outlet:
  - Curved Fixed Spout: CAPLF0001 & CLLF15001
  - Gooseneck Swivel Spout: CAPLF0005, CLLF10005 & CLLF15005
- **Flow Style:** Laminar Flow
- **Working Pressures:** 50kPa-500kPa (Recommended : 350kPa)
- **Working Temperatures:** 5°C - 80°C
- **Finish:** Chrome Plated

Product Features

- Lead Free Brass
- No crevices to eliminate bacterial build-up
- Handles with Red, Yellow & Blue button indicators supplied
- Soft seal, easy action ceramic disc cartridge
- Allen key fixings for secure handles and outlets
- Interchangeable Handles (100mm Lever, 150mm Lever and Capstan)
- Three cartridges used in all Cleanline products for easier maintenance
- Flow variants available
- Product customisation available
- Recommended for use in health and aged care projects

EXPOSED MIXING SETS

Technical Information

- Material:
  - Body: Lead Free DZR Brass
  - Handle: Brass
- **Cartridge:** Ceramic Disc (Quarter Turn)
- **Cartridge Size:** 5/8''
- Inlet:
  - 15mm: CAPLF0010, CAPLF0012, CLLF10010, CLLF10012, CLLF15010 & CLLF15012
  - 15mm Male: CAPLF0015, CLLF10015 & CLLF15015
- Outlet:
  - Gooseneck Swivel Spout: CAPLF0010, CAPLF0015, CLLF10010, CLLF15010 & CLLF15015
  - Fixed Parallel Spout: CAPLF0012, CLLF10012 & CLLF15012
- **Flow Style:** Laminar Flow
- **Working Pressures:** 50kPa-500kPa (Recommended : 350kPa)
- **Working Temperatures:** 5°C - 80°C
- **Finish:** Chrome Plated

Product Features

- Lead Free Brass
- No crevices to eliminate bacterial build-up
- Handles with Red, Yellow & Blue button indicators supplied: CAPLF0010, CAPLF0012, CAPLF0015, CLLF15010, CLLF15012 & CLLF15015
- Red, Yellow & Blue button indicators supplied: CLLF10010, CLLF10012 & CLLF10015
- Soft seal, easy action ceramic disc cartridge
- Allen key fixings for secure handles and outlets
- Interchangeable Handles (100mm Lever, 150mm Lever and Capstan)
- Three cartridges used in all Cleanline products for easier maintenance
- Eccentric bases for easier installation: CAPLF0010, CAPLF0012, CLLF15010 & CLLF15012
- Flow variants available
- Product customisation available
- Recommended for use in health and aged care projects

*Product information is subject to disclaimer within this catalogue.

CLEANLINE LEAD FREE BRASS

RECESS MIXING SETS

Technical Information

- **Material:**
  - Body: Lead Free DZR Brass
  - Handle: Brass
- **Cartridge:**
  - Ceramic Disk (Quarter Turn)
- **Cartridge Size:** 5/8''
- **Inlet:** 15mm
- **Outlet:**
  - Gooseneck Swivel Spout: CAPLF0035, CLLF10035 & CLLF15035
  - Fixed Parallel Spout: CAPLF0040, CLLF10040 & CLLF15040
- **Flow Style:** Laminar Flow
- **Working Pressures:** 50kPa-500kPa (Recommended : 350kPa)
- **Working Temperatures:** 5°C - 80°C
- **Finish:** Chrome Plated

Product Features

- Lead Free Brass
- No crevices to eliminate bacterial build-up
- Handles with Red, Yellow & Blue button indicators supplied
- Soft seal, easy action ceramic disc cartridge
- Allen key fixings for secure handles and outlets
- Interchangeable Handles (100mm Lever, 150mm Lever and Capstan)
- Three cartridges used in all Cleanline products for easier maintenance
- Recommended for use in health and aged care projects

CONTROL VALVES

Technical Information

- **Material:**
  - Body: Lead Free DZR Brass
  - Handle: Brass
- **Cartridge:** Ceramic Disc (Quarter Turn)
- **Cartridge Size:** 5/8''
- **Inlet:** 15mm
- **Working Pressures:** 50kPa-500kPa (Recommended : 350kPa)
- **Working Temperatures:** 5°C - 80°C
- **Finish:** Chrome Plated

Product Features

- Lead Free Brass
- No crevices to eliminate bacterial build-up
- Handles with Red, Yellow & Blue button indicators supplied
- Soft seal, easy action ceramic disc cartridge
- Allen key fixings for secure handles and outlets
- Interchangeable Handles (100mm Lever, 150mm Lever and Capstan)
- Three cartridges used in all Cleanline products for easier maintenance
- Recommended for use in health and aged care projects

WASHING MACHINE & CISTERN TAPS

Technical Information

- **Material:**
  - Body: Lead Free DZR Brass
  - Handle: Brass
- **Cartridge:**
  - Washing Machine Tap: Jumper Valve
  - Cistern Tap: Ceramic Disc (Quarter turn)
- **Cartridge Size:** 5/8''
- **Inlet:** 15mm
- **Outlet:**
  - 20mm Male Outlet: CAPLF0045(H,C), CLLF10045(H,C) & CLLF15045(H,C)
  - 15mm Male Outlet: CAPLF0050(H,C), CLLF10050(H,C) & CLLF15050(H,C)
- **Flow Style:** Free Flow
- **Working Pressures:** 50kPa-500kPa (Recommended : 350kPa)
- **Working Temperatures:** 5°C - 80°C
- **Finish:** Chrome Plated

Product Features

- Lead Free Brass
- No crevices to eliminate bacterial build-up
- Handles with Red, Yellow & Blue button indicators supplied
- Soft seal, easy action ceramic disc cartridge
- Allen key fixings for secure handles and outlets
- Interchangeable Handles (100mm Lever, 150mm Lever and Capstan)
- Three cartridges used in all Cleanline products for easier maintenance
- Recommended for use in health and aged care projects

SPOUTS

Technical Information

- **Material:** Lead Free DZR Brass
- **Inlet:**
  - 15mm Male: SLF1000
  - 15mm Female: SLF1500, SLF2500W, SLF3000 & SLF4000
- **Outlet:**
  - Curved Fixed Spout: SLF1000
  - Gooseneck Swivel Spout: SLF1500 & SLF2500W
  - Fixed Parallel Spout: SLF3000 & SLF4000
- **Flow Style:** Aerated Flow
- **Working Pressures:** 50kPa-500kPa (Recommended : 350kPa)
- **Working Temperatures:** 5°C - 80°C
- **Finish:** Chrome Plated

Product Features

- Lead Free Brass
- Laminar Flow Available
- Durable Design
- Allen key fixings for secure outlets: SLF1500 & SLF2500W
- Adaptable to all Gentec tapware
- Recommended for any commercial projects

*Product information is subject to disclaimer within this catalogue.

CLEANLINE LEAD FREE BRASS

CLLF10001

Basin Set

Lead Free DZR Brass Hob Mounted 100mm Lever Basin Set

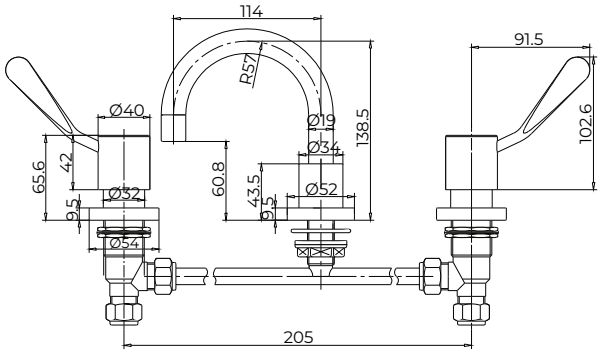

WATER RATING www.waterrating.gov.au 6.0 litres per minute

Lead Free
AS 3718
Lic WMKA25617
SAI Global

CLLF15001

Basin Set

Lead Free DZR Brass Hob Mounted 150mm Lever Basin Set w/ Curved Fixed Spout

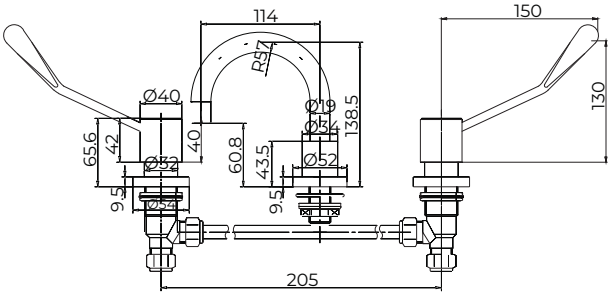

WATER RATING www.waterrating.gov.au 6.0 litres per minute

Lead Free
AS 3718
Lic WMKA25617
SAI Global

CAPLF0001

Basin Set

Lead Free DZR Brass Hob Mounted Capstan Basin Set w/ Curved Fixed Spout

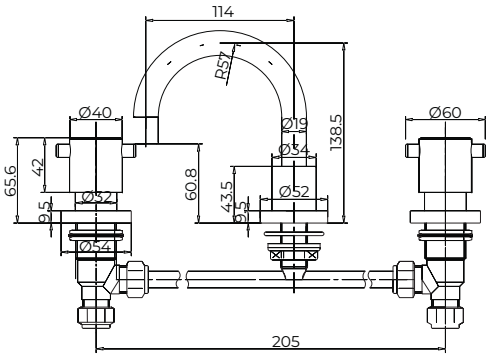

WATER RATING www.waterrating.gov.au 6.0 litres per minute

Lead Free
AS 3718
Lic WMKA25617
SAI Global

CLLF10005

Sink Set

Lead Free DZR Brass Hob Mounted 100mm Lever Sink Set w/ Gooseneck Swivel Spout

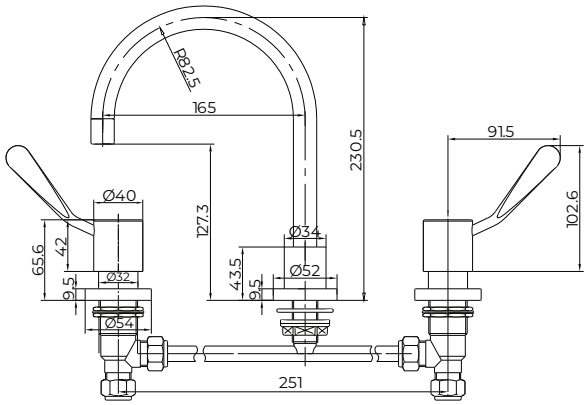

WATER RATING www.waterrating.gov.au 7.5 litres per minute

Lead Free
AS 3718
Lic WMKA25617
SAI Global

CLLF15005

Sink Set

Lead Free DZR Brass Hob Mounted 150mm Lever Sink Set w/ Gooseneck Swivel Spout

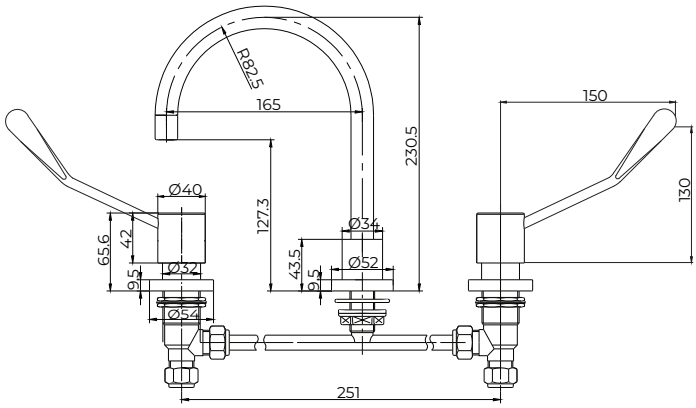

WATER RATING www.waterrating.gov.au 7.5 litres per minute

Lead Free
AS 3718
Lic WMKA25617
SAI Global

CAPLF0005

Sink Set

Lead Free DZR Brass Hob Mounted Capstan Sink Set w/ Gooseneck Swivel Spout

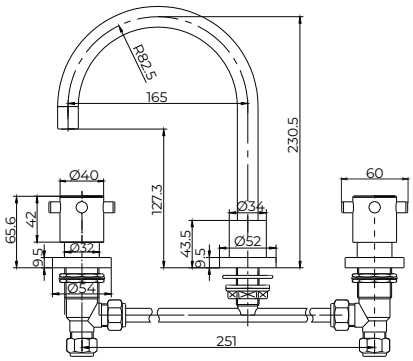

WATER RATING www.waterrating.gov.au 7.5 litres per minute

Lead Free
AS 3718
Lic WMKA25617
SAI Global

*Product information is subject to disclaimer within this catalogue.

CLEANLINE LEAD FREE BRASS

CLLF10010

Exposed Mixing Set

Lead Free DZR Brass Wall Mounted 100mm Lever Exposed Mixing Set w/ Gooseneck Swivel Spout

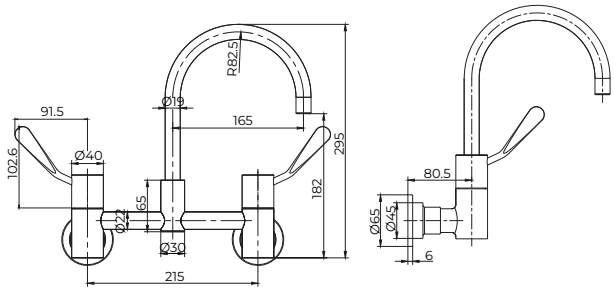

WATER RATING
www.waterrating.gov.au
7.5 litres per minute
Licence No. 1334

Lead Free
AS 3718
Lic WMKA25617
SAI Global

CLLF15010

Exposed Mixing Set

Lead Free DZR Brass Wall Mounted 150mm Lever Exposed Mixing Set w/ Gooseneck Swivel Spout

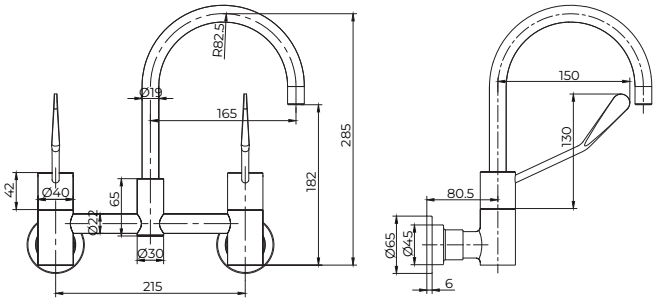

WATER RATING
www.waterrating.gov.au
7.5 litres per minute
Licence No. 1334

Lead Free
AS 3718
Lic WMKA25617
SAI Global

CAPLF0010

Exposed Mixing Set

Lead Free DZR Brass Wall Mounted Capstan Exposed Mixing Set w/ Gooseneck Swivel Spout

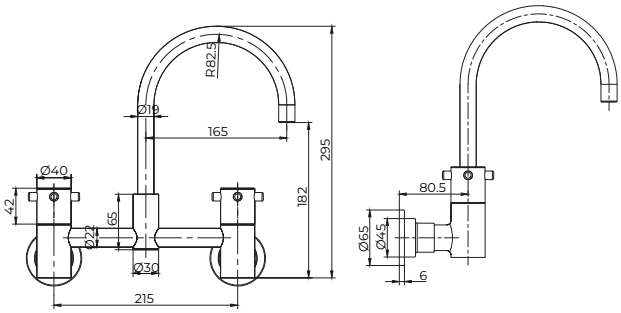

WATER RATING
www.waterrating.gov.au
7.5 litres per minute
Licence No. 1334

Lead Free
AS 3718
Lic WMKA25617
SAI Global

CLLF10012

Exposed Mixing Set

Lead Free DZR Brass Wall Mounted 100mm Lever Exposed Mixing Set w/ Fixed Parallel Spout

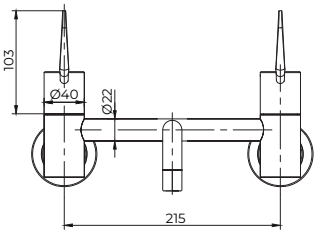

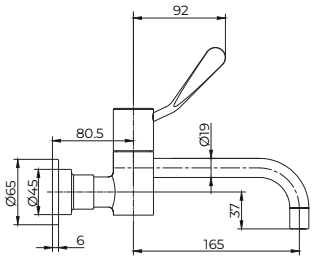

WATER RATING
www.waterrating.gov.au
6.0 litres per minute
In accordance with AS/NZS 6400
Licence No. 1334
GENTEC AUSTRALIA

Lead Free
AS 3718
Lic WMKA25617
SAI Global

CLLF15012

Exposed Mixing Set

Lead Free DZR Brass Wall Mounted 150mm Lever Exposed Mixing Set w/ Fixed Parallel Spout

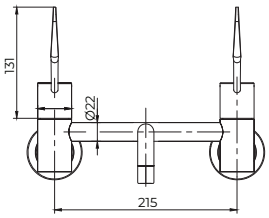

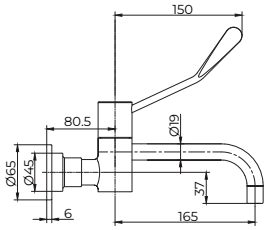

WATER RATING
www.waterrating.gov.au
6.0 litres per minute
In accordance with AS/NZS 6400
Licence No. 1334
GENTEC AUSTRALIA

Lead Free
AS 3718
Lic WMKA25617
SAI Global

CAPLF0012

Exposed Mixing Set

Lead Free DZR Brass Wall Mounted Capstan Exposed Mixing Set w/ Fixed Parallel Spout

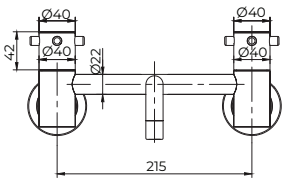

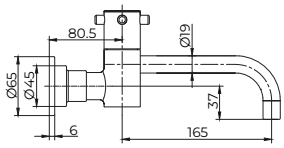

WATER RATING
www.waterrating.gov.au
6.0 litres per minute
In accordance with AS/NZS 6400
Licence No. 1334
GENTEC AUSTRALIA

Lead Free
AS 3718
Lic WMKA25617
SAI Global

*Product information is subject to disclaimer within this catalogue.

CLEANLINE LEAD FREE BRASS

CLLF10015

Exposed Mixing Set

Lead Free DZR Brass Hob Mounted 100mm Lever Exposed Mixing Set

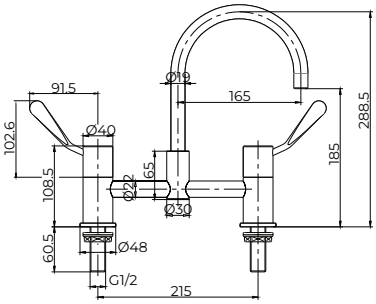

WATER RATING www.waterrating.gov.au 7.5 litres per minute

Lead Free AS 3718 Lic WMKA25617 SAI Global

CLLF15015

Exposed Mixing Set

Lead Free DZR Brass Hob Mounted 150mm Lever Exposed Mixing Set w/ Gooseneck Swivel Spout

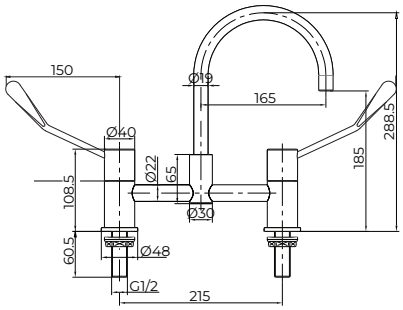

WATER RATING www.waterrating.gov.au 7.5 litres per minute

Lead Free AS 3718 Lic WMKA25617 SAI Global

CAPLF0015

Exposed Mixing Set

Lead Free DZR Brass Hob Mounted Capstan Exposed Mixing Set w/ Gooseneck Swivel Spout

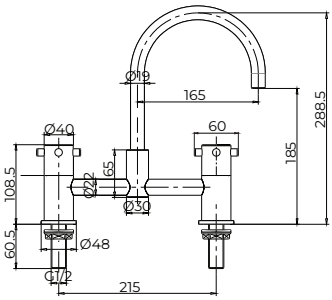

WATER RATING www.waterrating.gov.au 7.5 litres per minute

Lead Free AS 3718 Lic WMKA25617 SAI Global

CLLF10035

Recess Mixing Set

Lead Free DZR Brass Wall Mounted 100mm Lever Recess Mixing Set w/ Gooseneck Swivel Spout

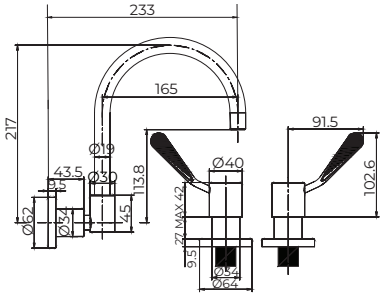

WATER RATING www.waterrating.gov.au 7.5 litres per minute

Lead Free AS 3718 Lic WMKA25617 SAI Global

CLLF15035

Recess Mixing Set

Lead Free DZR Brass In-Wall 150mm Lever Recess Mixing Set w/ Gooseneck Swivel Spout

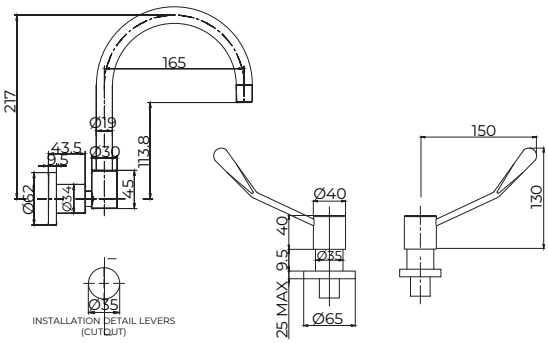

WATER RATING www.waterrating.gov.au 7.5 litres per minute

Lead Free AS 3718 Lic WMKA25617 SAI Global

CAPLF0035

Recess Mixing Set

Lead Free DZR Brass Wall Mounted Capstan Recess Mixing Set w/ Gooseneck Swivel Spout

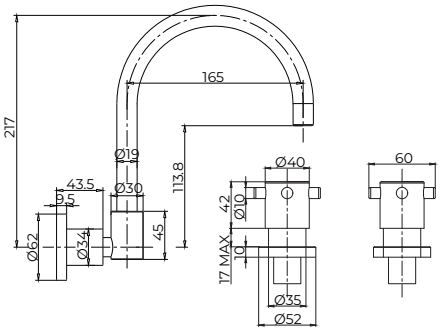

WATER RATING www.waterrating.gov.au 7.5 litres per minute

Lead Free AS 3718 Lic WMKA25617 SAI Global

*Product information is subject to disclaimer within this catalogue.

CLEANLINE LEAD FREE BRASS

CLLF10040

Recess Mixing Set

Lead Free DZR Brass In-Wall 100mm Lever Recess Mixing Set w/ Fixed Parallel Spout

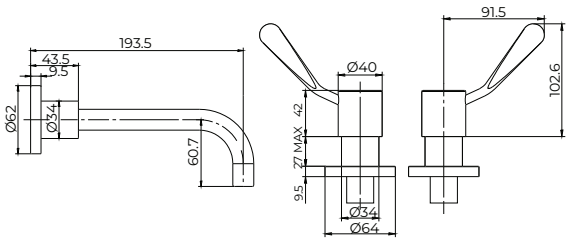

WATER RATING
www.waterrating.gov.au
5.5 litres per minute
Licence No. 1334

Lead Free
AS 3718
Lic WMKA25617
SAI Global

CLLF15040

Recess Mixing Set

Lead Free DZR Brass In-Wall 150mm Lever Recess Mixing Set w/ Fixed Parallel Spout

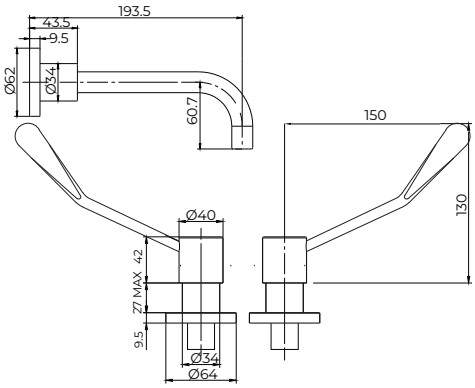

WATER RATING
www.waterrating.gov.au
5.5 litres per minute
Licence No. 1334

Lead Free
AS 3718
Lic WMKA25617
SAI Global

CAPLF0040

Recess Mixing Set

Lead Free DZR Brass Wall Mounted Capstan Recess Mixing Set w/ Fixed Parallel Spout

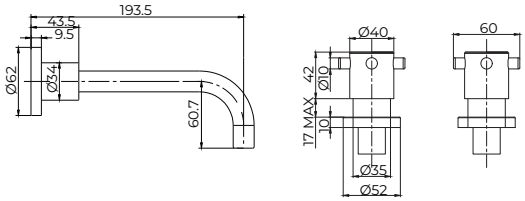

WATER RATING
www.waterrating.gov.au
5.5 litres per minute
Licence No. 1334

Lead Free
AS 3718
Lic WMKA25617
SAI Global

CLLF10025 (H, C)

Control Valves

Lead Free DZR Brass Wall Mounted 100mm Lever Control Valve

Individually Purchased
CLLF10025H
CLLF10025C
Red, Blue and Yellow indicators provided.

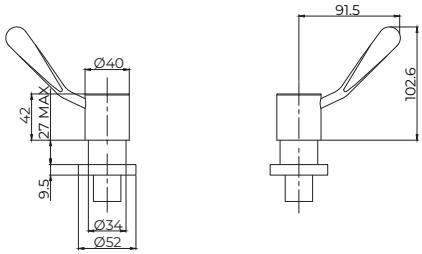

Lead Free
AS 3718
Lic WMKA25617
SAI Global

CLLF15025 (H, C)

Control Valves

Lead Free DZR Brass Wall Mounted 150mm Lever Control Valve

Individually Purchased
CLLF15025H
CLLF15025C
Red, Blue and Yellow indicators provided.

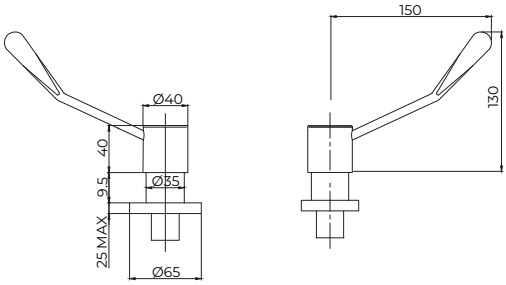

Lead Free
AS 3718
Lic WMKA25617
SAI Global

CAPLF0025 (H, C)

Control Valves

Lead Free DZR Brass Wall Mounted Capstan Control Valve

Individually Purchased
CAPLF0025H
CAPLF0025C
Red, Blue and Yellow indicators provided.

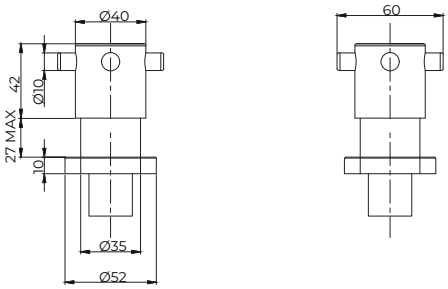

Lead Free
AS 3718
Lic WMKA25617
SAI Global

*Product information is subject to disclaimer within this catalogue.

CLEANLINE LEAD FREE BRASS

CLLF10030 (H, C)

Control Valves

Lead Free DZR Brass Hob Mounted 100mm Lever Control Valve

Individually Purchased
CLLF10030H
CLLF10030C
Red, Blue and Yellow indicators provided.

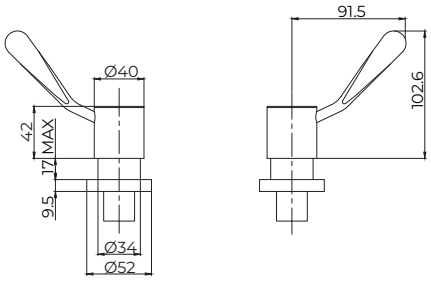

Lead Free
AS 3718
Lic WMKA25617
SAI Global

CLLF15030 (H, C)

Control Valves

Lead Free DZR Brass Hob Mounted 150mm Lever Control Valve

Individually Purchased
CLLF15030H
CLLF15030C
Red, Blue and Yellow indicators provided.

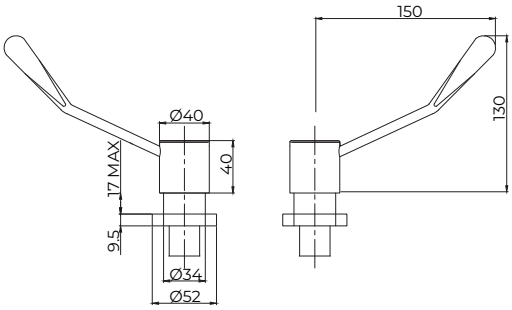

Lead Free
AS 3718
Lic WMKA25617
SAI Global

CAPLF0030 (H, C)

Control Valves

Lead Free DZR Brass Hob Mounted Capstan Control Valve

Individually Purchased
CAPLF0030H
CAPLF0030C
Red, Blue and Yellow indicators provided.

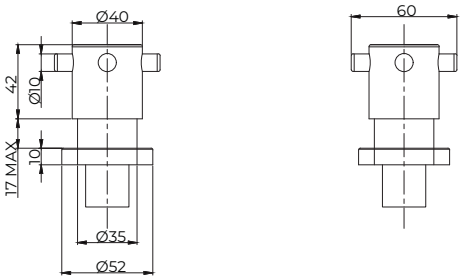

Lead Free
AS 3718
Lic WMKA25617
SAI Global

CLLF10045 (H, C)

Washing Machine Tap

Lead Free DZR Brass Wall Mounted 100mm Lever Washing Machine Tap w/ 20mm Male Outlet

Individually Purchased
CLLF10045H
CLLF10045C
Red, Blue and Yellow indicators provided.

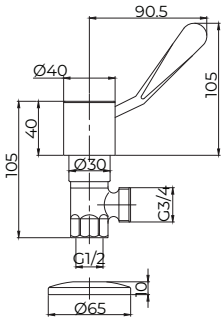

Lead Free
AS 3718
Lic WMKA25617
SAI Global

CLLF15045 (H, C)

Washing Machine Tap

Lead Free DZR Brass Wall Mounted 150mm Lever Washing Machine Tap w/ 20mm Male Outlet

Individually Purchased
CLLF15045H
CLLF15045C
Red, Blue and Yellow indicators provided.

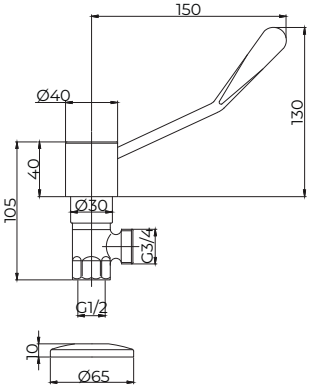

Lead Free
AS 3718
Lic WMKA25617
SAI Global

CAPLF0045 (H, C)

Washing Machine Tap

Lead Free DZR Brass Wall Mounted Capstan Washing Machine Tap w/ 20mm Male Outlet

Individually Purchased
CAPLF0045H
CAPLF0045C
Red, Blue and Yellow indicators provided.

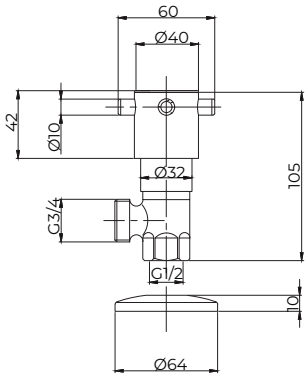

Lead Free
AS 3718
Lic WMKA25617
SAI Global

*Product information is subject to disclaimer within this catalogue.

CLEANLINE LEAD FREE BRASS

CLLF10050 (H, C)

Cistern Tap

Lead Free DZR Brass Wall Mounted 100mm Lever Cistern Tap w/ 15mm Male Outlet

Individually Purchased
CLLF10050H
CLLF10050C
Red, Blue and Yellow indicators provided.

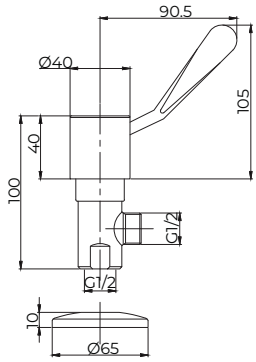

Lead Free
AS 3718
Lic WMKA25617
SAI Global

CLLF15050 (H, C)

Cistern Tap

Lead Free DZR Brass Wall Mounted 150mm Lever Cistern Tap w/ 15mm Male Outlet

Individually Purchased
CLLF15050H
CLLF15050C
Red, Blue and Yellow indicators provided.

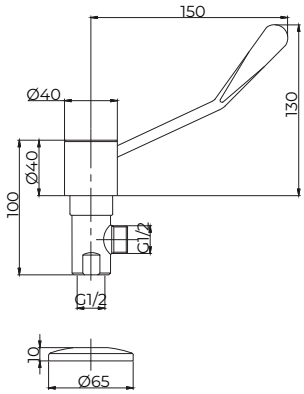

Lead Free
AS 3718
Lic WMKA25617
SAI Global

CAPLF0050 (H, C)

Cistern Tap

Lead Free DZR Brass Wall Mounted Capstan Cistern Tap w/ 15mm Male Outlet

Individually Purchased
CAPLF0050H
CAPLF0050C
Red, Blue and Yellow indicators provided.

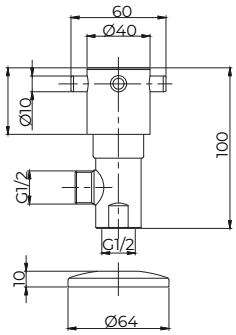

Lead Free
AS 3718
Lic WMKA25617
SAI Global

SLF1000

Spout

Lead Free DZR Brass Hob Mounted Fixed Basin Spout

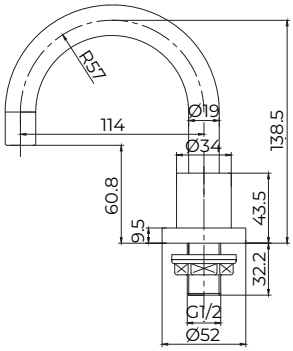

WATER RATING
www.waterrating.gov.au
6.0 litres per minute
In accordance with AS/NZS 6400
Licence No. 1334
GENTEC AUSTRALIA

Lead Free
AS 3718
Lic WMKA25617
SAI Global

SLF1500

Spout

Lead Free DZR Brass Hob Mounted Swivel Gooseneck Sink Spout

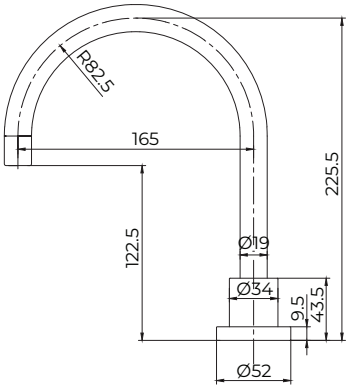

WATER RATING
www.waterrating.gov.au
7.5 litres per minute
In accordance with AS/NZS 6400
Licence No. 1334
GENTEC AUSTRALIA

Lead Free
AS 3718
Lic WMKA25617
SAI Global

SLF2500W

Spout

Lead Free DZR Brass Wall Mounted Swivel Gooseneck Sink Spout

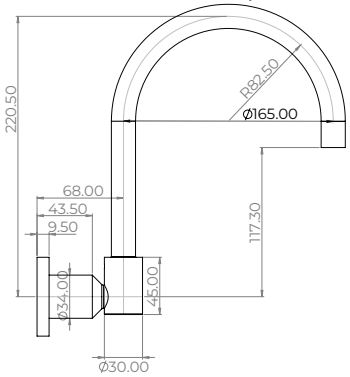

WATER RATING
www.waterrating.gov.au
7.5 litres per minute
In accordance with AS/NZS 6400
Licence No. 1334
GENTEC AUSTRALIA

Lead Free
AS 3718
Lic WMKA25617
SAI Global

*Product information is subject to disclaimer within this catalogue.

CLEANLINE LEAD FREE BRASS

SLF3000

Spout

Lead Free DZR Brass Wall Mounted Fixed Straight Spout

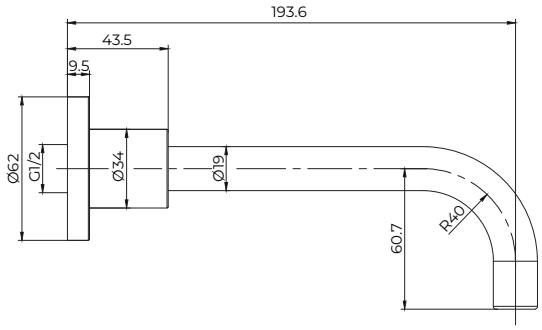

WATER RATING
www.waterrating.gov.au
5.5 litres per minute
In accordance with AS/NZS 6400
Licence No. 1334
GENTEC AUSTRALIA

Lead Free
AS 3718
Lic WMKA25617
SAI Global

SLF4000

Spout

Lead Free DZR Brass Wall Mounted Fixed Straight Spout

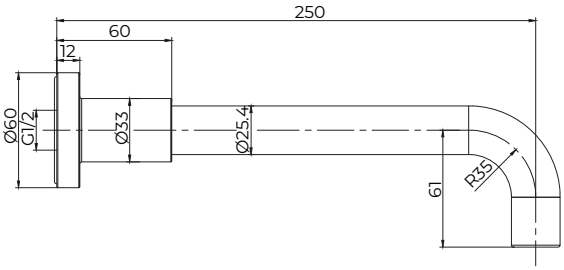

WATER RATING
www.waterrating.gov.au
6.0 litres per minute
In accordance with AS/NZS 6400
Licence No. 1334
GENTEC AUSTRALIA

Lead Free
AS 3718
Lic WMKA25617
SAI Global

Energy Efficient

Water Savings

Easy Operation

Green Star & NABERS Rating

NUGEN LEAD FREE BRASS

Experience the perfect blend of innovation, functionality, and sustainability with the NUGEN LEAD FREE BRASS Single Lever Mixers.

These mixers feature a sleek and modern design and are easy to use with a single lever for water flow and temperature control. Made from Lead Free DZR Brass, they are designed to meet the demands of modern commercial, health, and hospitality environments, offering superior performance while promoting energy efficiency, water savings and user convenience.

With a range of customisable features and a commitment to safer, lead free water delivery, the NUGEN LEAD FREE BRASS range sets the standard for safe, environmentally conscious water solutions.

*Product information is subject to disclaimer within this catalogue.

NUGEN LEAD FREE BRASS

BASIN & SINK MIXERS

Technical Information

- **Material:** Lead Free DZR Brass
- **Cartridge:**
  - Ceramic Disc (Kerox) - Cold Start: NGMLF1000 & NGMLF2000D
  - Ceramic Disc (Kerox) - Normal Operation: NGMLF3500 & NGMLF3500D
- **Cartridge Size:** 35 mm
- **Inlet:** 15 mm Female Flexible Connections
- **Outlet:**
  - Low Line Swivel Spout: NGMLF3500 & NGMLF3500D
- **Flow Style:** Laminar Flow
- **Working Pressures:** 150kPa-500kPa (Recommended : 350kPa)
- **Working Temperatures:** 5°C - 80°C
- **Finish:** Chrome Plated

Product Features

- Lead Free Brass
- Smooth close operation
- More hygienic
- The basin tap is designed to eliminate stagnant water
- Additional Legionella prevention
- Supplied with a cold start cartridge which saves energy by preventing warm water being drawn while the handle is in the neutral position: NGMLF1000 & NGMLF2000D
- Supplied with PEX inlet hoses
- Handles with Red & blue colour indicators available on request
- Flow Variants Available

SHOWER MIXERS

Technical Information

- **Material:** Lead Free DZR Brass
- **Cartridge:** Ceramic Disc (Kerox) - Normal Operation
- **Cartridge Size:** 35 mm
- **Inlet:** 15mm Female Connections
- **Working Pressures:** 150kPa-500kPa (Recommended : 350kPa)
- **Working Temperatures:** 5°C - 80°C
- **Finish:** Chrome Plated

Product Features

- Lead Free Brass
- Smooth close operation
- More hygienic
- The basin tap is designed to eliminate stagnant water
- Additional Legionella prevention
- With cold start cartridge: saves energy by preventing warm water being drawn while the handle is in the neutral position
- Handles with Red, yellow & blue colour indicators available on request
- Flow Variants Available

NGMLF1000

Single Lever Basin Mixer

Lead Free DZR Brass Hob Mounted Basin Mixer w/ Yellow and Blue Printed Handle

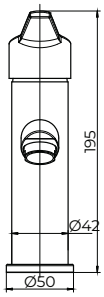

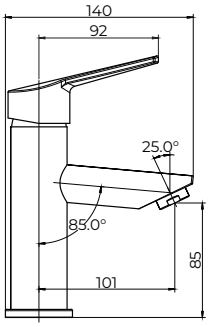

WATER RATING www.waterrating.gov.au 6.0 litres per minute

Lead Free AS 3718 Lic WMKA25617 SAI Global

NGMLF2000D

Single Lever Care Basin Mixer

Lead Free DZR Brass Hob Mounted Basin Mixer w/ Yellow and Blue Printed Care Handle

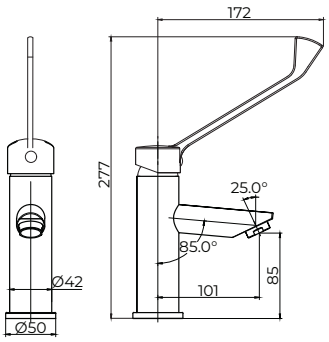

WATER RATING www.waterrating.gov.au 6.0 litres per minute

Lead Free AS 3718 Lic WMKA25617 SAI Global

NGMLF3500

Single Lever Sink Mixer

Lead Free DZR Brass Hob Mounted Low Line Swivel Spout Sink Mixer w/ Yellow and Blue Printed Handle

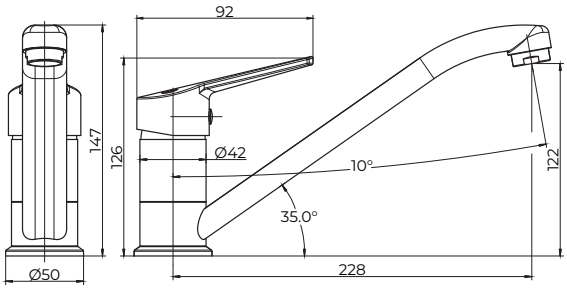

WATER RATING www.waterrating.gov.au 7.5 litres per minute

Lead Free AS 3718 Lic WMKA25617 SAI Global

*Product information is subject to disclaimer within this catalogue.

NUGEN LEAD FREE BRASS

NGMLF3500D

Single Lever Care Sink Mixer

Lead Free DZR Brass Hob Mounted Low Line Swivel Spout Sink Mixer w/ Yellow and Blue Printed Care Handle

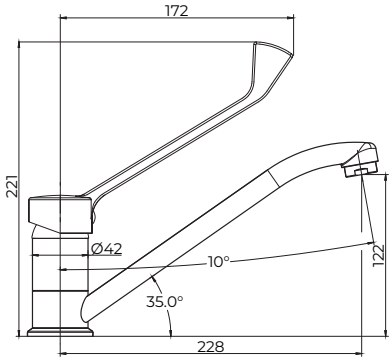

The more stars the more water efficient
WATER RATING
www.waterrating.gov.au
7.5 litres per minute
In accordance with AS/NZS 6400
Licence No. 1334
GENTEC AUSTRALIA

Lead Free
AS 3718
Lic WMKA25617
SAI Global

NGMLF4000

Single Lever Shower Mixer

Lead Free DZR Brass In-Wall Recess Shower Mixer w/ Yellow and Blue Printed Handle

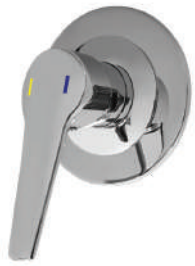

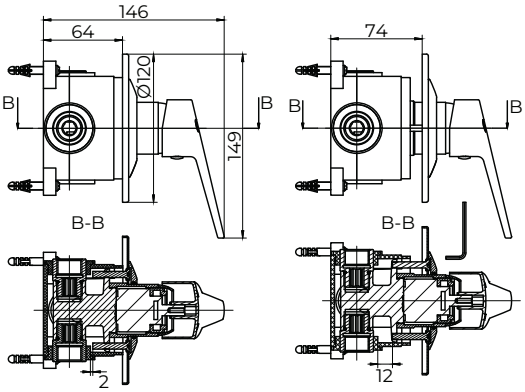

Lead Free
AS 3718
Lic WMKA25617
SAI Global

FLOSTOP LEAD FREE BRASS

GENTEC's FLOSTOP LEAD FREE BRASS Timed Flow Taps are compliant with ABCB's requirements for lead free of less than a weighted average lead content of 0.25%, allowable by ABCB's requirements.

These taps are designed to conserve water in high-traffic areas and are highly durable and resistant to vandalism, making them suitable for use in public washrooms and schools.

*Product information is subject to disclaimer within this catalogue.

FLOSTOP LEAD FREE BRASS

TIMED FLOW BIB TAPS

Technical Information

- **Material:** Lead Free DZR Brass
- **Cartridge:** Timed Flow (Hydraulic)
- **Cartridge Size:** 15 mm
- **Inlet:** 15mm Male/ Extension provided: 15mm Female
- **Outlet:** Single Temperature Timed Flow
- **Flow Style:** Free Flow
- **Run Time**: 5 (+/- 1) seconds (Fixed)
- **Working Pressures:** 150kPa-500kPa (Recommended : 350kPa)
- **Working Temperatures:** 5°C - 50°C
- **Finish:** Chrome Plated

Product Features

- Lead Free Brass
- Soft-close, hydraulically operated time flow means that it's suitable for all markets
- Designed to be durable and anti-vandal. Suitable for use in public areas
- One service kit used across the Flostop range for easy maintenance
- Supplied with inlet strainer and flow controller
- Yellow & Blue button indicators supplied
- Various Flow Cups available for longer/ shorter run times
- Product customisation available
- Recommended for commercial and public projects

TIMED FLOW PILLAR TAPS

Technical Information

- **Material:** Lead Free DZR Brass
- **Cartridge:** Timed Flow (Hydraulic)
- **Cartridge Size:** 15 mm
- **Inlet:**
  - 15mm Male: TFTLF1500,TFTLF1500AC & TFTLF4500
  - 15mm Female Flexible Connections: TFTLF2000 & TFTLF2500
- **Outlet:**
  - Single Temperature Timed Flow: TFTLF1500, TFTLF1500AC & TFTLF4500
  - Right Angled Single Temperature Timed Flow: TFTLF2000
  - Right Angled Hot and Cold Temperature Timed Flow: TFTLF2500
- **Flow Style:**
  - Aerated Flow: TFTLF1500
  - Free Flow: TFTLF1500AC & TFTLF4500
  - Laminar Flow: TFTLF2000 & TFTLF2500
- **Run Time:** 5 (+/- 1) seconds (Fixed)
- **Working Pressures:** 150kPa-500kPa (Recommended : 350kPa)
- **Working Temperatures:** 5°C - 50°C
- **Finish:** Chrome Plated

Product Features

- Lead Free Brass
- Soft-close, hydraulically operated time flow means that it's suitable for all markets
- Designed to be durable and anti-vandal. Suitable for use in public areas
- Concealed Flow Straightener: TFTLF1500AC
- Adjustable Up to 0-40 (+/-10) seconds run time cartridge: TFTLF1500
- Up to 0-40 (+/-10) seconds run time available: TFTLF1500AC
- Blue and Yellow button indicators supplied: TFTLF1500 & TFTLF2000
- Blue, Red and Yellow button indicators supplied: TFTLF2500
- Various Flow Cups available for longer/ shorter run times: TFTLF2000, TFTLF2500 & TFTLF4500
- One service kit used across the Flostop range for easy maintenance
- Supplied with inlet strainer and flow controller
- Product customisation available
- Recommended for commercial and public projects

TIMED FLOW BUBBLERS

Technical Information

- **Material:** Lead Free DZR Brass
- **Bubbler Guard Material:** UV Stabilised Food Grade Rubber
- **Cartridge:** Timed Flow (Hydraulic)
- **Cartridge Size:** 15 mm
- **Inlet:** 15mm
- **Outlet:**
  - Right Angled Single Temperature Timed Flow : TFTLF8000
  - 122° Angled Single Temperature Timed Flow : TFTLF8000
  - Upright Single Temperature Timed Flow: TFTLF8050UR & TFTLF8050URL
- **Flow Style:** Free Flow
- **Run Time:** 0-40 (+/-10) seconds (Adjustable)
- **Working Pressures:** 150kPa-500kPa (Recommended : 350kPa)
- **Working Temperatures:** 5°C - 50°C
- **Finish:** Chrome Plated

Product Features

- Lead Free Brass
- Soft-close, hydraulically operated time flow means that it's suitable for all markets
- Designed to be durable and anti-vandal. Suitable for use in public areas
- One service kit used across the Flostop range for easy maintenance
- Supplied with inlet strainer and flow controller
- Up to 0-40 (+/-10) seconds run time options available: TFTLF8000
- Adjustable Up to 0-40 (+/-10) seconds run time cartridge: TFTLF8050, TFTLF8050UR & TFTLF8050URL
- Recommended for commercial and public projects

TIMED FLOW VALVES

Technical Information

- **Material:** Lead Free DZR Brass
- **Cartridge:** Timed Flow (Hydraulic)
- **Cartridge Size:** 15 mm
- **Inlet:** 15mm Male
- **Outlet:**
  - Single Temperature Timed Flow: TFTLF1010
  - N/A: TFTLF1010ADJ
- **Flow Style:** Free Flow
- **Run Time:**
  - 15 (+/-) seconds (Fixed): TFTLF1010
  - 0-40 (+/-10) Seconds (Adjustable): TFTLF1010ADJ
- **Working Pressures:** 150kPa-500kPa (Recommended : 350kPa)
- **Working Temperatures:** 5°C - 50°C
- **Finish:** Chrome Plated

Product Features

- Lead Free Brass
- Adjustable Timed Cartridge available: TFTLF1010
- Soft-close, hydraulically operated time flow means that it's suitable for all markets
- Designed to be durable and anti-vandal. Suitable for use in public areas
- One service kit used across the Flostop range for easy maintenance
- Supplied with inlet strainer and flow controller
- Blue and Yellow button indicators supplied
- Various Flow Cups available for longer/ shorter run times: TFTLF1010
- Adjustable Up to 0-40 (+/-10) seconds run time cartridge: TFTLF1010ADJ
- Product customisation available
- Recommended for commercial and public projects

*Product information is subject to disclaimer within this catalogue.

FLOSTOP LEAD FREE BRASS

TIMED FLOW SHOWERS

Technical Information

- **Material:**
  - Valve: Lead Free DZR Brass
  - Enclosure: Stainless Steel
- **Cartridge:** Timed Flow (Hydraulic)
- **Cartridge Size:** 15 mm
- **Inlet:** 15mm Male
- **Outlet:**
  - Single Temperature Timed Flow 15mm Male Outlet: TFTLF1015
  - Mixed Temperature Timed Flow 15mm Male Outlet: TFTLF1016
- **Flow Style:** Free Flow
- **Run Time:** 0-40 (+/- 10) Seconds (Adjustable)
- **Working Pressures:** 150kPa-500kPa (Recommended : 350kPa)
- **Working Temperatures:** 5°C - 50°C
- **Finish:** Chrome Plated

Product Features

- Lead Free Brass
- Soft-close, hydraulically operated time flow means that it's suitable for all markets
- Designed to be durable and anti-vandal. Suitable for use in public areas
- One service kit used across the Flostop range for easy maintenance
- Supplied with inlet strainer and flow controller
- Adjustable Up to 0-40 (+/-10) seconds run time cartridge
- Recommended for commercial and public projects

TIMED FLOW KNEE OPERATED VALVES

Technical Information

- **Material:** Lead Free DZR Brass
- **Cartridge:** Timed Flow (Hydraulic)
- **Cartridge Size:** 15 mm
- **Inlet:** 15mm Male
- **Outlet:**
  - 15mm Male: TFTLF3500
  - Single Temperature Timed Flow: TFTLF3500KIT
- **Flow Style:**
  - 15mm Male (G 1/2" BSP): TFTLF3500
  - Aerated Flow: TFTLF3500KIT
- **Run Time:**
  - 15 (+/- 2) seconds (Fixed): TFTLF3500
  - 15 seconds (Fixed): TFTLF3500KIT
- **Working Pressures:** 150kPa-500kPa (Recommended : 350kPa)
- **Working Temperatures:** 5°C - 50°C
- **Finish:** Chrome Plated

Product Features

- All components comply with less than 0.25% lead: TFTLF3500
- Soft-close, hydraulically operated time flow means that it's suitable for all markets
- Designed to be durable and anti-vandal. Suitable for use in public areas
- One service kit used across the Flostop range for easy maintenance
- Supplied with inlet strainer and flow controller
- Various Flow Cups available for longer/ shorter run times
- Recommended for commercial and public projects

TFTLF1000W

Timed Flow Bib Tap

Lead Free DZR Brass Wall Mounted Single Temperature Timed Flow Bib Tap w/ Female Extension

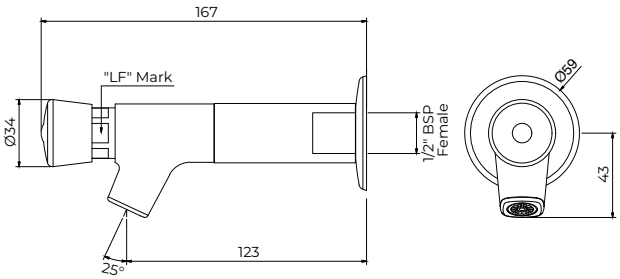

TFTLF1000WL

Timed Flow Bib Tap

Lead Free DZR Brass Wall Mounted Single Temperature Timed Flow Bip Tap w/ Care Lever Handle and Female Extension

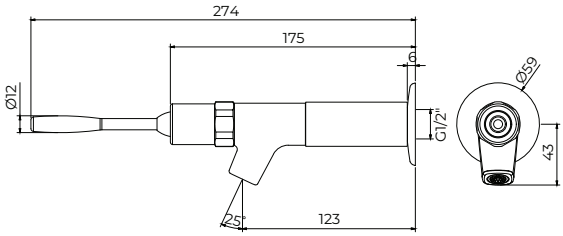

TFTLF1500

Timed Flow Pillar Tap

Lead Free DZR Brass Hob Mounted Single Temperature Timed Flow Pillar Tap

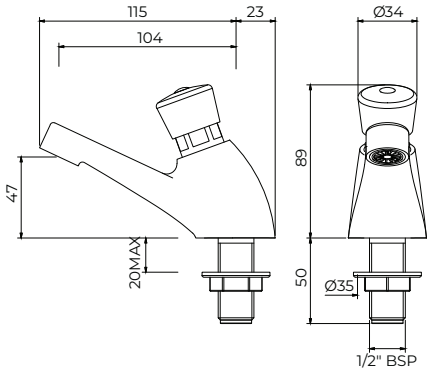

*Product information is subject to disclaimer within this catalogue.

FLOSTOP LEAD FREE BRASS

TFTLF1500AC

Timed Flow Pillar Tap

Lead Free DZR Brass Hob Mounted Single Temperature Timed Flow Pillar Tap w/ Care Lever Handle

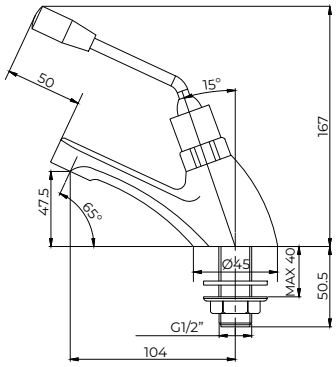

WATER RATING www.waterrating.gov.au 4.0 litres per minute

Lead Free AS 3718 Lic WM 74827 ApprovalMark

TFTLF2000

Timed Flow Pillar Tap

Lead Free DZR Brass Hob Mounted Right Angled Single Temperature Timed Flow Pillar Tap

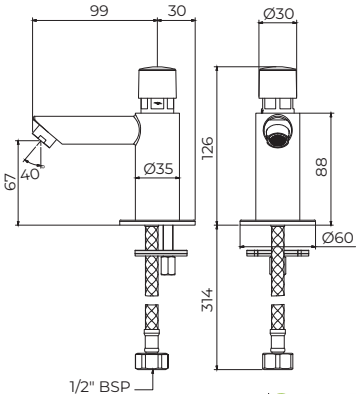

WATER RATING www.waterrating.gov.au 5.0 litres per minute

Lead Free AS 3718 Lic WM 74827 ApprovalMark

TFTLF2500

Timed Flow Pillar Tap

Lead Free DZR Brass Hob Mounted Right Angled Hot and Cold Temperature Timed Flow Pillar Tap w/ Temperature Blender

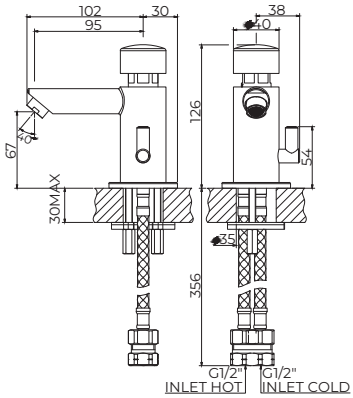

WATER RATING www.waterrating.gov.au 4.5 litres per minute

Lead Free AS 3718 Lic WM 74827 ApprovalMark

TFTLF4500

Timed Flow Care Pillar Tap

Lead Free DZR Brass Hob Mounted Single Temperature Timed Flow Pillar Tap w/ Lever Handle

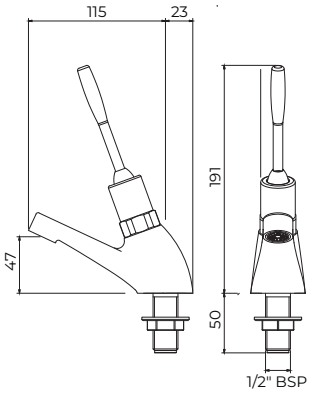

WATER RATING
www.waterrating.gov.au
4.0 litres per minute
In accordance with AS/NZS 6400
Licence No. 1334
GENTEC AUSTRALIA

Lead Free
AS 3718
Lic WM 74827
ApprovalMark

TFTLF8000

Timed Flow Bubbler

Lead Free DZR Brass Wall Mounted Right Angled Single Temperature Timed Flow Bubbler w/ Safety Bubbler Guard

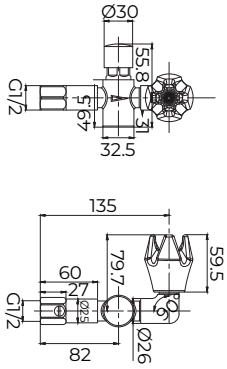

Lead Free
AS 3718
Lic WM 74827
ApprovalMark

TFTLF8050

Timed Flow Bubbler

Lead Free DZR Brass Wall Mounted Angled Single Temperature Timed Flow Bubbler w/ Safety Bubbler Guard

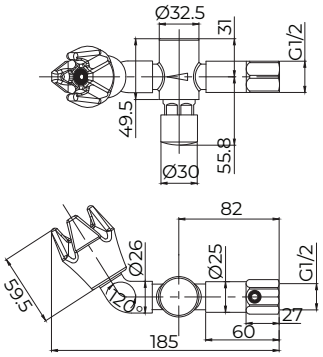

Lead Free
AS 3718
Lic WM 74827
ApprovalMark

*Product information is subject to disclaimer within this catalogue.

FLOSTOP LEAD FREE BRASS

TFTLF8050UR

Timed Flow Bubbler

Lead Free DZR Brass Hob Mounted Upright Single Temperature Timed Flow Bubbler w/ Safety Bubbler Guard

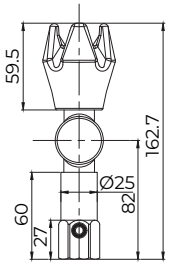

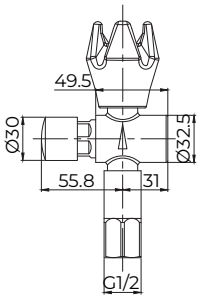

Lead Free
AS 3718
Lic WM 74827
ApprovalMark

TFTLF8050URL

Timed Flow Bubbler

Lead Free DZR Brass Hob Mounted Upright Single Temperature Timed Flow Bubbler w/ Safety Bubbler Guard and Care Lever Handle

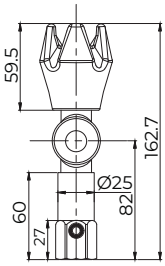

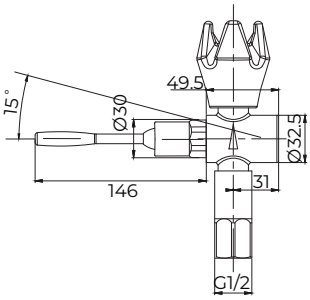

Lead Free
AS 3718
Lic WM 74827
ApprovalMark

TFTLF1010

Timed Flow Control Valve

Lead Free DZR Brass Wall Mounted Single Temperature Timed Flow Control Valve

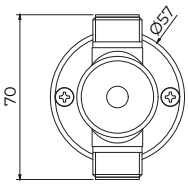

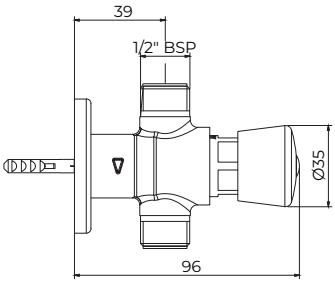

Lead Free
AS 3718
Lic WM 74827
ApprovalMark

TFTLF1010ADJ

Shower/Control Valve

Lead Free DZR Brass Wall Mounted Shower/Control Valve with Chrome Plated Concealed Connection - Adjustable Timing Free Flow

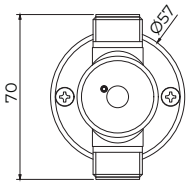

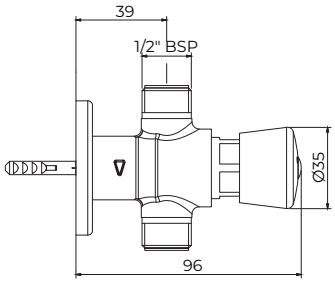

Lead Free
AS 3718
Lic WM 74827
ApprovalMark

TFTLF1015

Timed Flow Shower Set

Lead Free DZR Brass In-Wall Single Temperature Timed Flow 15mm Male Shower Set w/ Recess Stainless Steel Enclosure

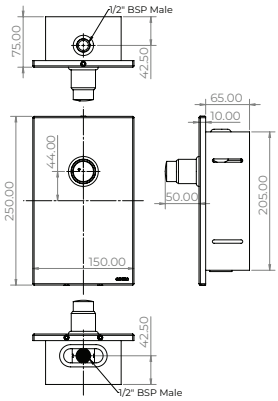

Lead Free
AS 3718
Lic WM 74827
ApprovalMark

TFTLF1016

Timed Flow Shower Mixer

Lead Free DZR Brass In-Wall Hot and Cold Temperature Timed Flow Shower Mixer w/ Concealed Stainless Steel Enclosure

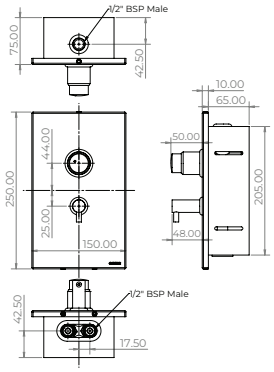

Lead Free
AS 3718
Lic WM 74827
ApprovalMark

*Product information is subject to disclaimer within this catalogue.

FLOSTOP LEAD FREE BRASS

TFTLF3500

Timed Flow Knee Operated Valve

Lead Free DZR Brass Wall Mounted 15mm Male Knee Operated Valve w/ Knee Wand Attachment

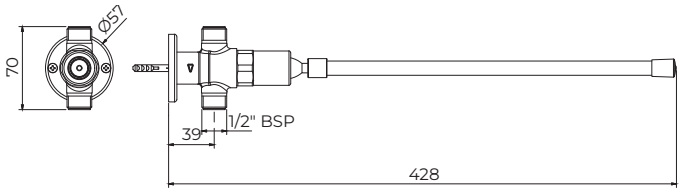

Lead Free
AS 3718
Lic WM 74827
ApprovalMark

TFTLF3500KIT

Timed Flow Knee Operated Valve Kit

Lead Free DZR Brass Wall Mounted Single Temperature Timed Flow Knee Operated Valve w/ Knee Wand Attachment and Fixed Basin Spout

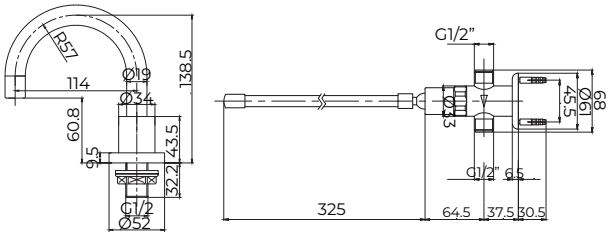

The more stars the more water efficient
WATER RATING
www.waterrating.gov.au
6.0 litres per minute
In accordance with AS/NZS 6400
Licence No. 1334
GENTEC AUSTRALIA

Lead Free
AS 3718
Lic WM 74827
ApprovalMark

Digital Sensor Programming

Hygiene Flush

SMARTEC LEAD FREE BRASS

SMARTEC LEAD FREE BRASS Electronic Sensor Taps are modern and hygienic solutions for hand hygiene in commercial and public settings. This touch-free taps use advanced sensor technology to automatically dispense water, reducing the risk of cross-contamination and promoting good hygiene practices. With their sleek design and reliable operation, SMARTEC LEAD FREE BRASS Electronic Sensor Taps are ideal for use in all types of projects.

*Product information is subject to disclaimer within this catalogue.

SMARTEC LEAD FREE BRASS

ELECTRONIC SENSOR TAPS

Technical Information

- **Material:** Lead Free DZR Brass
- **Cartridge:** Solenoid Valve
- **Cartridge Size:** 15 mm
- **Inlet:** 15mm Female Flexible Connections
- **Flow Style:** Laminar Flow
- **Run Time:** 2 seconds (auto on / off)
- **Working Pressures:** 50kPa-500kPa (Recommended : 350kPa)
- **Working Temperatures:** 5°C - 50°C
- **Finish:** Chrome Plated

Product Features

- Lead Free Brass
- Digital sensor technology; Sensor range, run timing and hygiene flush programming are adjustable post installation with the use of remote controls (sold separately)
- Extension leads available for both power and sensor
- IP67 for the sensor and sensor tap, IPX4 solenoid control box behind the wall
- Integral strainer minimises fouling by debris in Solenoid
- Both battery and mains power options available (Configuration can be changed following installation)
- Hygiene flush programming minimises the risk of Legionella from infrequently used fixtures
- Recommended for all types projects
- Product customisation available

ELECTRONIC SENSOR PLATE

Technical Information

- **Material:** Zero Lead Stainless Steel 304
- **Cartridge:** Solenoid Valve
- **Cartridge Size:** 15 mm
- **Inlet:** 15mm Male
- **Run Time:** 15 seconds Wave on / Wave off
- **Working Pressures:** 50kPa-500kPa (Recommended : 350kPa)
- **Working Temperatures:** 5°C - 50°C
- **Finish:** Brushed

Product Feature

- Lead Free
- Digital sensor technology; Sensor range, run timing and hygiene flush programming are adjustable post installation with the use of remote controls (sold separately)
- Extension leads available for both power and sensor
- IP67 rated control box houses the solenoid valve and waterproof connections
- Integral strainer minimises fouling by debris
- Both battery and mains power options available (Configuration can be changed following installation)
- Hygiene flush programming minimises the risk of Legionella from infrequently used fixtures
- Can be used with any spout or outlet
- Recommended for all types projects
- Product customisation available

ELECTRONIC SOAP DISPENSERS

Technical Information

- **Material:** Brass, Pump mechanism: Plastic
- **Run Time:** 1.5 seconds (auto on / off)
- **Soap Viscosity:**
  - Between 1-3500m Pa.s (cP)
  - Suggested viscocity is 1800Pa.s (cP)
- **Soap Bottle capacity:**
  - 1L
  - 12 Volt Soap Pump
- **Finish:** Chrome Plated

Product Features

- Digital sensor technology; Sensor range and run timing are adjustable post installation with the use of remote controls (sold separately)
- Mains Powered option only
- Individual soap bottle is easily removable for refilling and servicing
- Recommended for all projects
- Product customisation available

*Product information is subject to disclaimer within this catalogue.

SMARTEC LEAD FREE BRASS

STSLF1000(M, B, BM)

Electronic Sensor Tap

Lead Free DZR Brass Hob Mounted Right Angle Electronic Tap w/ Infrared Sensor

M: Mains Powered

B: Proprietary Battery Powered

BM: Battery & Mains Powered

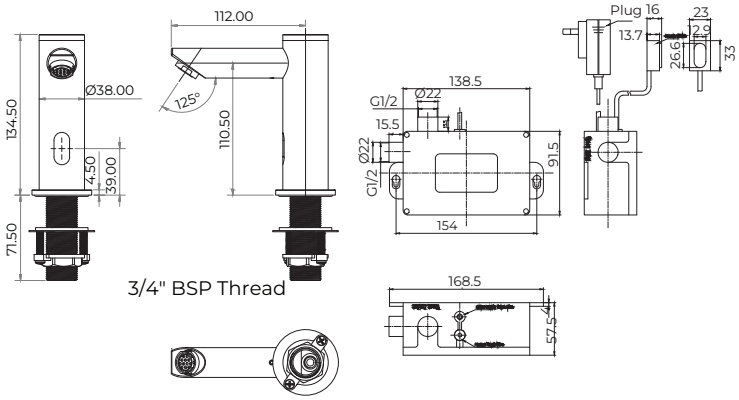

WATER RATING www.waterrating.gov.au 6.0 litres per minute

Lead Free AS 3718 Lic WMKA25617 SAI Global

STSLF2500(M, B, BM)

Electronic Sensor Tap

Lead Free DZR Brass Wall Mounted Electronic Tap w/ Infrared Sensor

M: Mains Powered

B: Proprietary Battery Powered

BM: Battery & Mains Powered

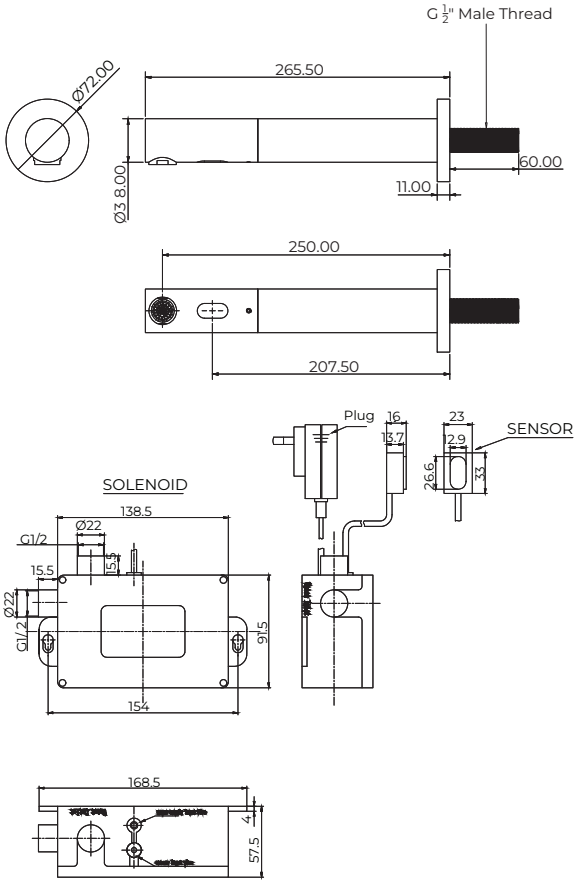

WATER RATING www.waterrating.gov.au 6.0 litres per minute

Lead Free AS 3718 Lic WMKA25617 SAI Global

STS3500(M, B, BM)

Electronic Sensor Plate

Zero Lead Stainless Steel 304 Wall Mounted Electronic Sensor Plate w/ No Spout Infrared Sensor

M: Mains Powered
B: Proprietary Battery Powered
BM: Battery & Mains Powered

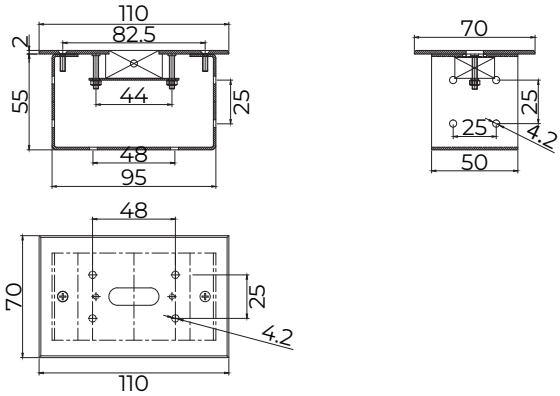

STS1020

Electronic Soap Dispenser

Brass Hob Mounted Electronic Soap Dispenser w/ Infrared Sensor Mains Powered

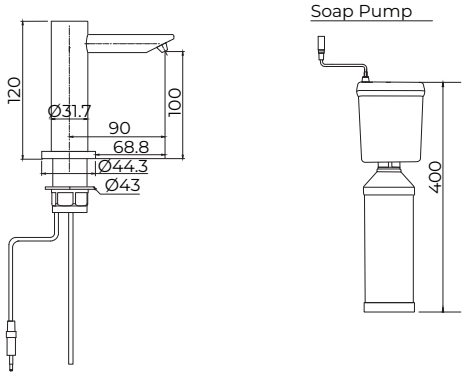

STS2520

Electronic Soap Dispenser

Brass Wall Mounted Electronic Soap Dispenser w/ Infrared Sensor Mains Powered

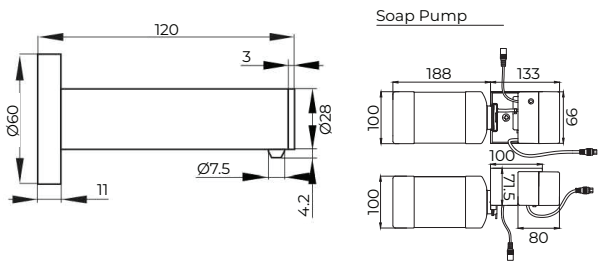

*Product information is subject to disclaimer within this catalogue.

JETFLO LEAD FREE BRASS

The JETFLO LEAD FREE BRASS food service range is built to meet the demands of commercial food preparation. It offers a versatile range of pre-rinse units that use less water and energy than conventional units. The design ensures efficient cleaning, and the range is suitable for commercial kitchen applications.

JETFLO LEAD FREE BRASS

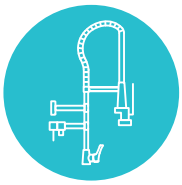

PRE-RINSE UNITS

Technical Information

- Material:
  - Body: Lead Free DZR Brass
- **Cartridge:** Ceramic Disc / Self Closing
- Cartridge Size:
  - 35mm: JETFLF1200 & JETFLF1200C
  - 15mm: JETFLF3000, JETFLF3000W, JETFLF4000, JETFLF5000, JETFLF5600, JETFLF6000 & JETFLF9900
- **Working Pressures:** 150kPa-500kPa (Recommended : 350kPa)
- **Working Temperatures:** 5°C - 80°C
- Finish:
  - Body: Chrome Plated
- Inlet:
  - 15 mm Female: JETFLF1200, JETFLF1200C, JETFLF5000, JETFLF5600 & JETFLF6000
  - 15mm: JETFLF3000, JETFLF3000W & JETFLF4000
  - 15mm Male: JETFLF9900
- **Flow Style:** Blade Spray / Laminar Flow

Product Features

- Lead Free Brass
- Jet spray in the trigger spray is created with a stainless steel blade that retains its shape for longer and provides an easier clean with less water use
- The soft, easy-clean hose provides flexibility and makes using the trigger spray easier
- Soft spring for easy operation
- The cold start cartridge prevents hot water from being drawn while the tap is still in the neutral position. No hot water or energy is used until the handle is turned towards the left
- Adjustable wall bracket (up to 250mm)
- Double-check valve
- Aerator nozzle outlet available for trigger spray
- Recommended for Commercial Kitchens: JETFLF1200, JETFLF1200C, JETFLF3000W, JETFLF5000, JETFLF6000 & JETFLF9900
- Recommended for Commercial Kitchens & Healthcare CSSD Areas: JETFLF3000, JETFLF4000 & JETFLF5600

*Product information is subject to disclaimer within this catalogue.

JETFLO LEAD FREE BRASS

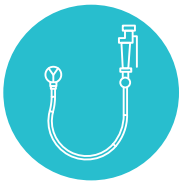

HANDHELD PRE-RINSE UNITS

Technical Information

- **Material:** Lead Free DZR Brass
- **Cartridge:**
  - Ceramic Disc / Self Closing: JETFLF7000
  - Self Closing: JETFLF7000
- **Working Pressures:** 150kPa-500kPa (Recommended : 350kPa)
- **Working Temperatures:** 5°C - 80°C
- **Finish:**
  - Body: Chrome Plated
- **Inlet:**
  - 15mm Male: JETFLF7000
  - 15mm Female: JETFLF7500
- **Flow Style:** Blade Spray/ Laminar Flow

Product Features

- Lead Free Brass
- The soft, easy-clean hose provides flexibility and makes using the trigger spray easier
- Soft spring for easy operation
- Double-check valve
- Aerator nozzle outlet available for trigger spray
- Recommended for Commercial Kitchens & Healthcare CSSD Areas

TRIGGER SPRAYS

Technical Information

- **Material:** Lead Free DZR Brass
- **Cartridge:** Self Closing
- **Working Pressures:** 150kPa-500kPa (Recommended : 350kPa)
- **Working Temperatures:** 5°C - 80°C
- **Finish:** Chrome Plated
- **Inlet:** 15mm Male
- **Flow Style:** Blade Spray

Product Features

- Lead Free Brass
- Trigger spray with blade spray provides an easier clean with less water use
- Recommended for commercial kitchens

JETFLF1200

Hob Mounted Pre-Rinse Unit

Lead Free DZR Brass Hob Mounted Pre-Rinse Unit w/ Pot Filler, Mixer

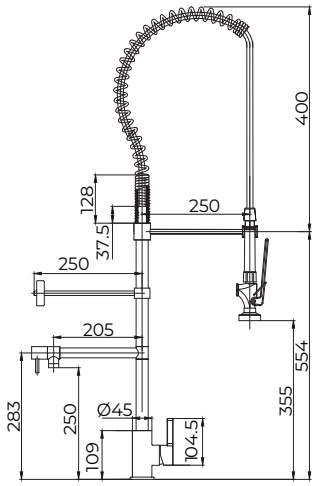

The more stars the more water efficient
WATER RATING
www.waterrating.gov.au
4.0 litres per minute (spray tap)
In accordance with AS/NZS 6400
Licence No. 1334
GENTEC AUSTRALIA
Second outlet
5 star
5.0 litres per minute

Lead Free
AS 3718
Lic WMKA25617
SAI Global

JETFLF1200C

Hob Mounted Pre-Rinse Unit

Lead Free DZR Brass Hob Mounted Pre-Rinse Unit w/ Pot Filler - Compact

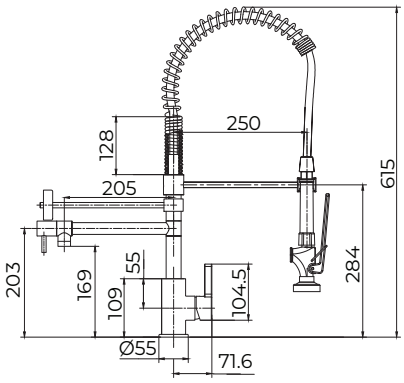

The more stars the more water efficient
WATER RATING
www.waterrating.gov.au
4.0 litres per minute (spray tap)
In accordance with AS/NZS 6400
Licence No. 1334
GENTEC AUSTRALIA
Second outlet
5 star
5.0 litres per minute

Lead Free
AS 3718
Lic WMKA25617
SAI Global

*Product information is subject to disclaimer within this catalogue.

JETFLO LEAD FREE BRASS

JETFLF3000

Wall Mounted Pre-Rinse Unit

Lead Free DZR Brass Wall Mounted Pre-Rinse Unit w/ Pot Filler, Recess Adaptors and 100mm Lever Handles

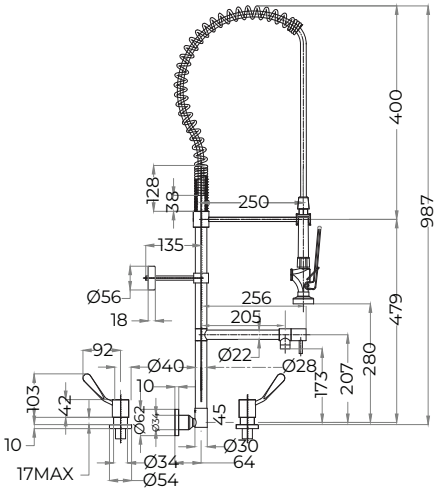

The more stars the more water efficient
WATER RATING
www.waterrating.gov.au
4.0 litres per minute (spray tap)
In accordance with AS/NZS 6400
Licence No. 1334
GENTEC AUSTRALIA
Second outlet
5 star
5.0 litres per minute

Lead Free
AS 3718
Lic WMKA25617
SAI Global

JETFLF3000W

Wall Mounted Pre-Rinse Unit

Lead Free DZR Brass Wall Mounted Pre-Rinse Unit w/ Pot Filler, Recess Adaptors and 100mm Lever Handles - Woolworths Model

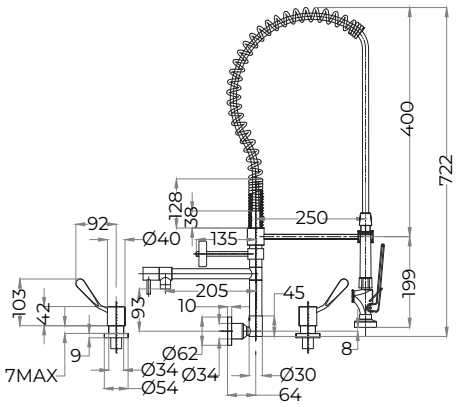

The more stars the more water efficient
WATER RATING
www.waterrating.gov.au
4.0 litres per minute (spray tap)
In accordance with AS/NZS 6400
Licence No. 1334
GENTEC AUSTRALIA
Second outlet
5 star
5.0 litres per minute

Lead Free
AS 3718
Lic WMKA25617
SAI Global

JETFLF4000

Hob Mounted Pre-Rinse Unit

Lead Free DZR Brass Hob Mounted Pre-Rinse Unit w/ Pot Filler, Control Valves and 100mm Lever Handles

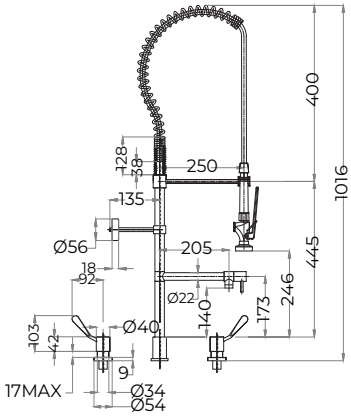

The more stars the more water efficient
WATER RATING
www.waterrating.gov.au
4.0 litres per minute (spray tap)
In accordance with AS/NZS 6400
Licence No. 1334
GENTEC AUSTRALIA
Second outlet
5 star
5.0 litres per minute

Lead Free
AS 3718
Lic WMKA25617
SAI Global

JETFLF5000

Wall Mounted Pre-Rinse Unit

Lead Free DZR Brass Wall Mounted Pre-Rinse Unit w/ Pot Filler

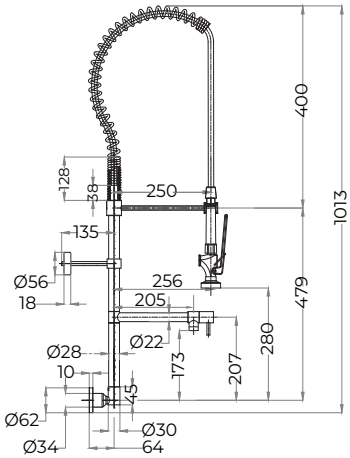

The more stars the more water efficient
WATER RATING
www.waterrating.gov.au
4.0 litres per minute (spray tap)
In accordance with AS/NZS 6400
Licence No. 1334
GENTEC AUSTRALIA
Second outlet
5 star
5.0 litres per minute

Lead Free
AS 3718
Lic WMKA25617
SAI Global

*Product information is subject to disclaimer within this catalogue.

JETFLO LEAD FREE BRASS

JETFLF5600

Wall Mounted Pre-Rinse Unit

Lead Free DZR Brass Wall Mounted Pre-Rinse Unit w/ Pot Filler, Exposed Mixing Breech and 100mm Lever Handles

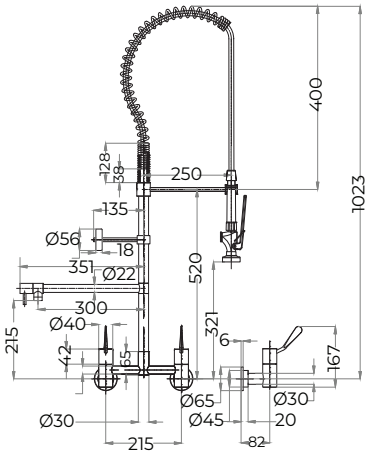

The more stars the more water efficient
WATER RATING
www.waterrating.gov.au
4.0 litres per minute (spray tap)
In accordance with AS/NZS 6400
Licence No. 1334
GENTEC AUSTRALIA
Second outlet
5 star
5.0 litres per minute

Lead Free
AS 3718
Lic WMKA25617
SAI Global

JETFLF6000

Hob Mounted Pre-Rinse Unit

Lead Free DZR Brass Hob Mounted Pre-Rinse Unit w/ Pot Filler

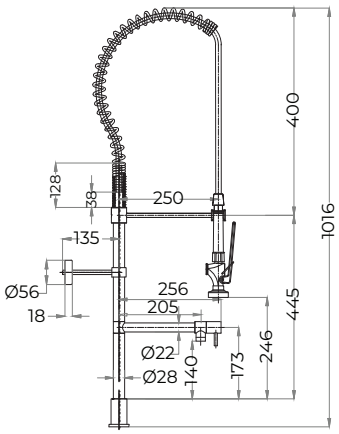

The more stars the more water efficient
WATER RATING
www.waterrating.gov.au
4.0 litres per minute (spray tap)
In accordance with AS/NZS 6400
Licence No. 1334
GENTEC AUSTRALIA
Second outlet
5 star
5.0 litres per minute

Lead Free
AS 3718
Lic WMKA25617
SAI Global

JETFLF9900

Hob Mounted Pre-Rinse Unit

Lead Free DZR Brass Hob Mounted Pre-Rinse Unit w/ Pro Filler, Exposed Mixing Set

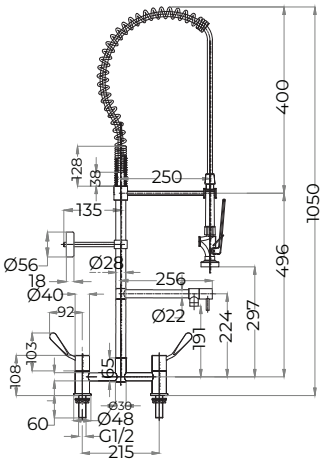

The more stars the more water efficient
WATER RATING
www.waterrating.gov.au
4.0 litres per minute (spray tap)
In accordance with AS/NZS 6400
Licence No. 1334
GENTEC AUSTRALIA
Second outlet
5 star
5.0 litres per minute

Lead Free
AS 3718
Lic WMKA25617
SAI Global

JETFLF7000

Handheld Pre-Rinse Unit

Lead Free DZR Brass Wall Mounted Pre-Rinse Unit w/ Spray Gun. 1m Hose and Cistern Tap

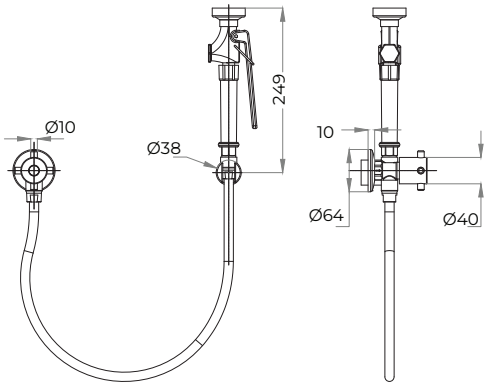

The more stars the more water efficient
WATER RATING
www.waterrating.gov.au
4.0 litres per minute
In accordance with AS/NZS 6400
Licence No. 1334
GENTEC AUSTRALIA

Lead Free
AS 3718
Lic WMKA25617
SAI Global

*Product information is subject to disclaimer within this catalogue.

JETFLO LEAD FREE BRASS

JETFLF7500

Handheld Pre-Rinse Unit

Lead Free DZR Brass Wall Mounted Pre-Rinse Unit w/ Spray Gun. 1m Hose and Bracket

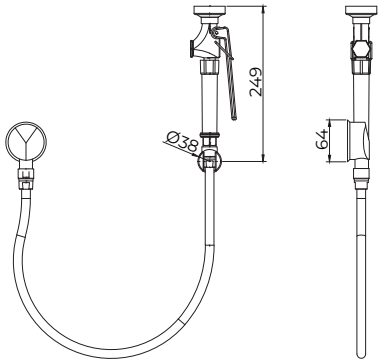

The more stars the more water efficient
WATER RATING
www.waterrating.gov.au
4.0 litres per minute
In accordance with AS/NZS 6400
Licence No. 1334
GENTEC AUSTRALIA

Lead Free
AS 3718
Lic WMKA25617
SAI Global

JETFLF0050

Trigger Spray

Lead Free DZR Brass Trigger Spray w/ Stainless Steel Outlet to Suit Pre-rinse Unit

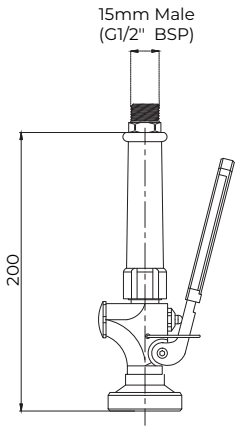

The more stars the more water efficient
WATER RATING
www.waterrating.gov.au
4.0 litres per minute
In accordance with AS/NZS 6400
Licence No. 1334
GENTEC AUSTRALIA

Lead Free
AS 3718
Lic WMKA25617
SAI Global

FLOMIX LEAD FREE BRASS

Introducing our FLOMIX LEAD FREE BRASS Thermostatic Mixing Valves, designed for precise water temperature control to prevent scalding and cold water shock.

Approved by NSW Health, these TMVs are crafted with Lead Free Brass, meeting ABCB's requirements for high-quality assurance. Trust in FLOMIX for reliable and compliant water temperature management.

*Product information is subject to disclaimer within this catalogue.

FLOMIX LEAD FREE BRASS

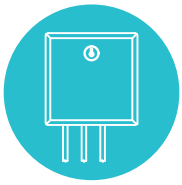

THERMOSTATIC MIXING VALVES

Technical Information

- **Material:** Lead Free DZR Brass
- **Cartridge:** Mechanical / Wax Element
- **Inlet:**
  - 15mm Male : MVLF5015 & MVLF6015
  - 20mm Copper Pipe : MVLF60153, MVLF60153BAC, MVLF60153H, MVLF60154, MVLF60154BAC & MVLF60154H
- **Outlet:**
  - 20mm Male : MVLF6015
  - 20mm Copper Pipe : MVLF5015, MVLF60153, MVLF60153BAC, MVLF60153H, MVLF60154, MVLF60154BAC & MVLF60154H
- **Working Temperatures:** 5°C - 80°C
- **Inlet temperature cold (°C):** Min 5°C - Max 30°C
- **Inlet temperature hot (°C):** Min 55°C - Max 80°C
- **Mixed outlet temperature (°C):** 35°C - 50°C
- **Max differential inlet pressure (kPa):** 6:1 Ratio
- **Working Pressures:** 50kPa-500kPa (Recommended : 350kPa)
- **Finish:** Chrome Plated

Product Features

- Lead Free Brass
- NSW Health approved
- Chrome plated valve
- Easy-to-use Hygiene Flush capability
- Can support up to 6 connections (depending on flow rate)
- MVLF6015 is designed for high flow applications
- Low cost maintenance
- Removable strainers and isolation points on both hot and cold sections allow for easy maintenance
- For NABERS rated projects: MVLF5015-Low Flow TMV to suit 2 LPM applications
- Recommended for any project

MVLF5015

Thermostatic Mixing Valve

NSW Health Approved Thermostatic Mixing Valve Lead Free DZR Brass Chrome Plated w/ Strainers and Non Return Valves

(Must be installed with isolation valves- not supplied by GENTEC)

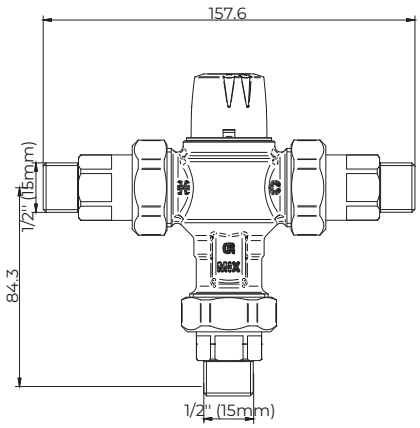

Lead Free
AS 4032.1
Lic WM 74512
ApprovalMark

MVLF6015

Thermostatic Mixing Valve

NSW Health Approved Thermostatic Mixing Valve Lead Free DZR Brass Chrome Plated w/ Strainers, Isolation and Non Return Valves

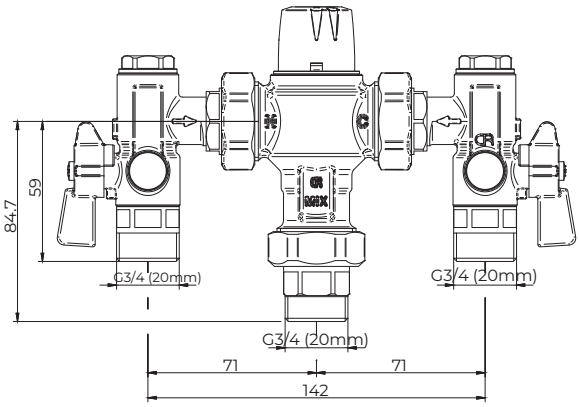

Lead Free
AS 4032.1
Lic WM 74512
ApprovalMark

*Product information is subject to disclaimer within this catalogue.

FLOMIX LEAD FREE BRASS

MVLF60153

Thermostatic Mixing Valve

NSW Health Approved Thermostatic Mixing Valve Lead Free DZR Brass Chrome Plated w/ Stainless Steel Recessed Enclosure with Lockable Lid and Copper Tails

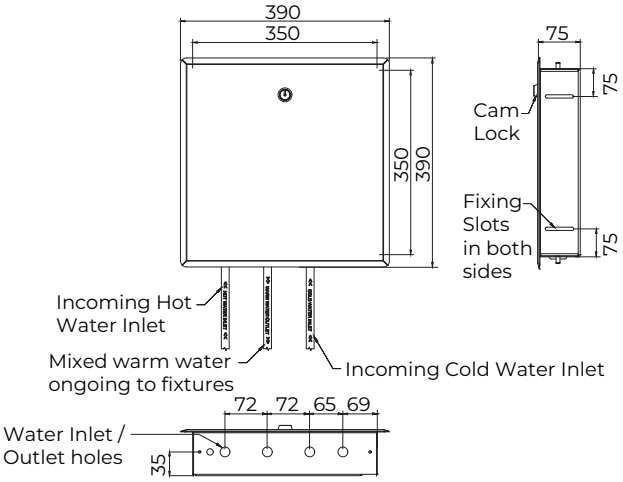

Lead Free
AS 4032.1
Lic WM 74512
ApprovalMark

MVLF60153H

Thermostatic Mixing Valve

NSW Health Approved Thermostatic Mixing Valve Lead Free DZR Brass Chrome Plated w/ Stainless Steel Recessed Enclosure with Hinged Lockable Lid and Copper Tails

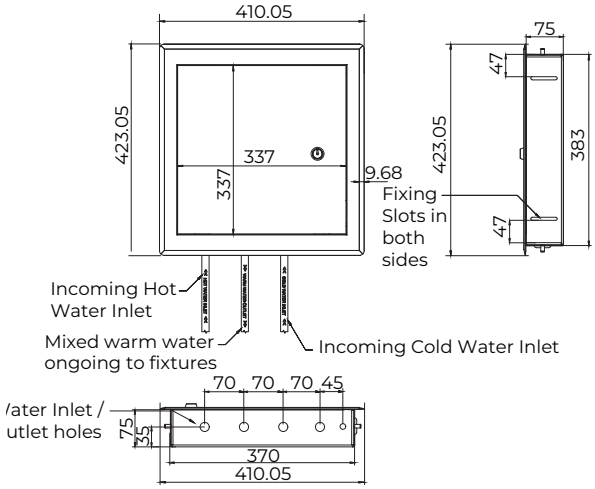

Lead Free
AS 4032.1
Lic WM 74512
ApprovalMark

MVLF60154

Thermostatic Mixing Valve

NSW Health Approved Thermostatic Mixing Valve Lead Free DZR Brass Chrome Plated w/ Cold Water Bypass, Stainless Steel Recessed Enclosure with Recessed Lockable Lid and Copper Tails

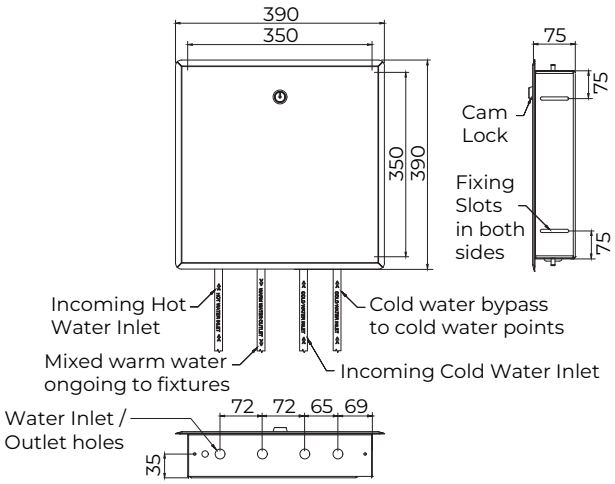

Lead Free
AS 4032.1
Lic WM 74512
ApprovalMark

MVLF60154H

Thermostatic Mixing Valve

NSW Health Approved Thermostatic Mixing Valve Lead Free DZR Brass Chrome Plated w/ Cold Water Bypass, Stainless Steel Recessed Enclosure with Hinged Lockable Lid and Copper Tails

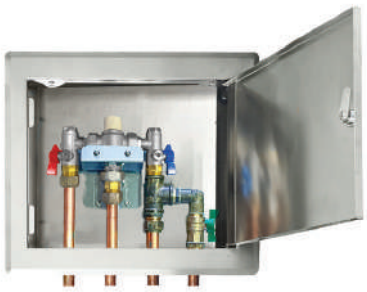

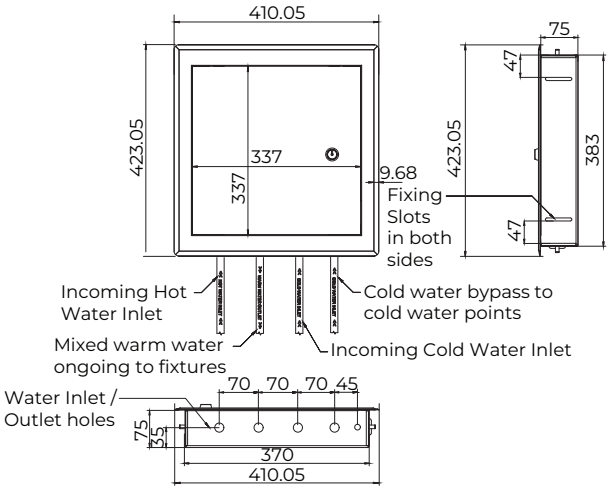

Lead Free
AS 4032.1
Lic WM 74512
ApprovalMark

*Product information is subject to disclaimer within this catalogue.

FLOMIX LEAD FREE BRASS

MVLF60153BAC

Thermostatic Mixing Valve

NSW Health Approved Thermostatic Mixing Valve Lead Free DZR Brass Chrome Plated w/ Copper Tails, Stainless Steel Enclosure and Temperature Probe Adapter

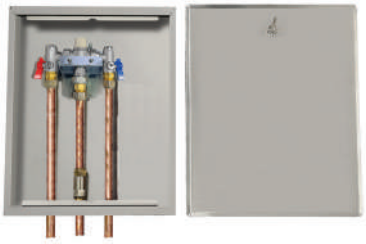

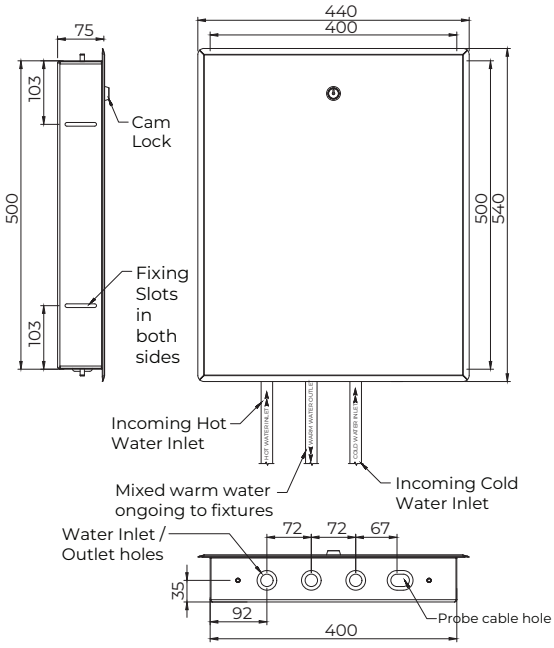

Lead Free
AS 4032.1
Lic WM 74512
ApprovalMark

MVLF60154BAC

Thermostatic Mixing Valve

NSW Health Approved Thermostatic Mixing Valve Lead Free DZR Brass Chrome Plated w/ Cold Water Bypass, Copper Tails, Stainless Steel Enclosure and Temperature Probe Adapter

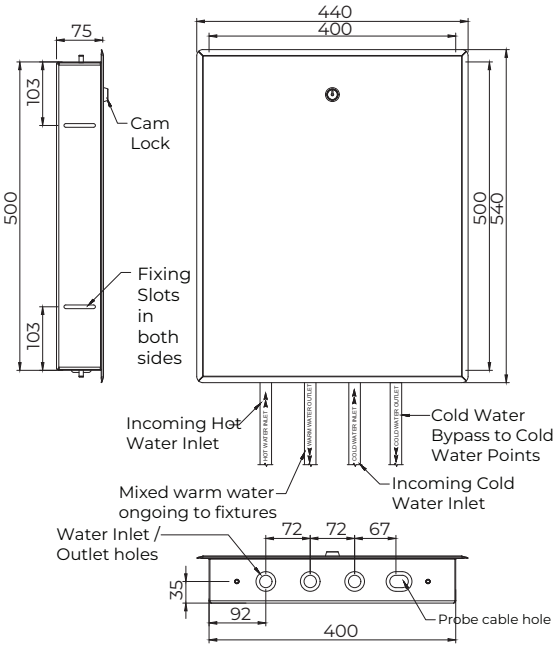

Lead Free
AS 4032.1
Lic WM 74512
ApprovalMark

TEMPSET LEAD FREE BRASS

Experience the pinnacle of water safety with our TEMPSET LEAD FREE BRASS Thermostatic Taps. Manufactured with Lead Free Brass and featuring a point-of-use design, these taps effectively reduce the risk of Legionella and other water-borne bacteria, ensuring the overall health of your water system.

Discover the innovation of a simple new method for hygiene flush, making it easy to clean, disinfect, and maintain the outlet.

*Product information is subject to disclaimer within this catalogue.

TEMPSET LEAD FREE BRASS

THERMOSTATIC MIXING TAPS

Technical Information

- **Material:** Lead Free DZR Brass
- **Cartridge:** Thermostatic
- **Inlet:**
  - 15 mm Female Flexible Connections: MVPMLF10100 & MVPMLF10150
  - 15mm Female : MVPMLF30100 & MVPMLF30150
- **Flow Style:** Laminar Flow
- **Working Temperatures:** 10°C - 50°C
- **Inlet temperature cold (°C):** Min 5°C - Max 30°C
- **Inlet temperature hot (°C):** Min 55°C - Max 80°C
- **Mixed outlet temperature (°C):** 35°C - 50°C
- **Max differential inlet pressure (kPa):** 6:1 Ratio
- **Working Pressures:** 50kPa-500kPa (Recommended : 350kPa)
- **Finish:** Chrome Plated

Product Features

- Lead Free Brass
- Point-of-use to reduce Legionella risk
- Removable spout for hygienic cleaning
- Supplied with strainers and non-return / isolation valves
- Thermostatic valve is located under the handle for easy maintenance
- Simple and easy-to-use Hygiene flush
- Recommended for health projects

THERMOSTATIC MIXING SHOWERS

Technical Information

- **Material:** Lead Free DZR Brass
- **Cartridge:** Thermostatic
- **Inlet:** 15mm Male
- **Working Temperatures:** 10°C - 50°C
- **Inlet temperature cold (°C):** Min 5°C - Max 30°C
- **Inlet temperature hot (°C):** Min 55°C - Max 80°C
- **Mixed outlet temperature (°C):** 35°C - 50°C
- **Max differential inlet pressure (kPa):** 6:1 Ratio
- **Working Pressures:** 50kPa-500kPa (Recommended : 350kPa)
- **Finish:** Chrome Plated

Product Features

- Lead Free Brass
- Point-of-use to reduce Legionella risk
- Removable spout for hygienic cleaning
- Supplied with strainers and non-return / isolation valves
- Thermostatic valve is located under the handle for easy maintenance
- Simple and easy-to-use Hygiene flush
- Laminar flow outlet
- Recommended for health projects

THERMOSTATIC MIXER

Technical Information

- **Material:** Lead Free DZR Brass
- **Cartridge:** Thermostatic
- **Inlet:** 15mm Male
- **Flow Style:** Laminar Flow
- **Working Temperatures:** 10°C - 50°C
- **Inlet temperature cold (°C):** Min 5°C - Max 30°C
- **Inlet temperature hot (°C):** Min 55°C - Max 80°C
- **Mixed outlet temperature (°C):** 35°C - 50°C
- **Max differential inlet pressure (kPa):** 10:1 Ratio
- **Working Pressures:** 50kPa-500kPa (Recommended : 350kPa)
- **Finish:**
  - Lid: Polished Stainless Steel
  - Spout: Chrome Plated

Product Features

- Lead Free Brass
- Point-of-use to reduce Legionella risk
- Domed handle available for temperature control setting
- Removable spout for hygienic cleaning
- Supplied with strainers and non-return / isolation valves
- Thermostatic valve is located under the handle for easy maintenance
- External temperature control
- Simple and easy-to-use Hygiene flush
- Recommended for health projects

*Product information is subject to disclaimer within this catalogue.

TEMPSET LEAD FREE BRASS

MVPMLF10100

Thermostatic Mixing Tap

NSW Health Approved Lead Free DZR Brass Hob Mounted Point-of-Use Thermostatic Mixing Tap w/ 100mm Lever

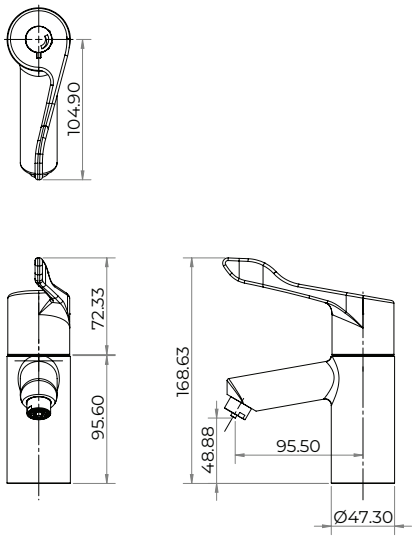

Lead Free
AS 4032.4
Lic WM 74512
ApprovalMark

MVPMLF10150

Thermostatic Mixing Tap

NSW Health Approved Lead Free DZR Brass Hob Mounted Point-of-Use Thermostatic Mixing Tap w/ 150mm Lever

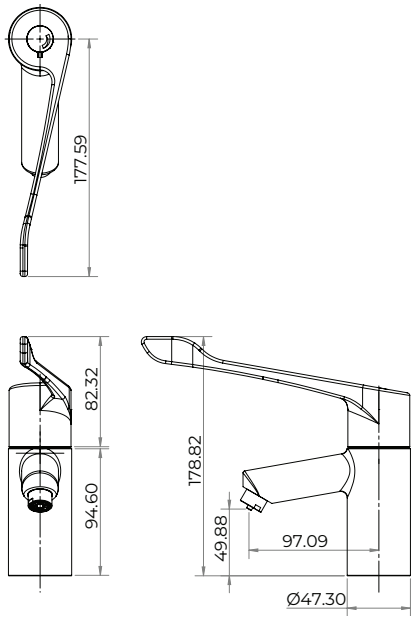

Lead Free
AS 4032.4
Lic WM 74512
ApprovalMark

MVPMLF30100

Thermostatic Mixing Tap

NSW Health Approved Lead Free DZR Brass Wall Mounted Point-of-Use Thermostatic Mixing Tap w/ 100mm Lever

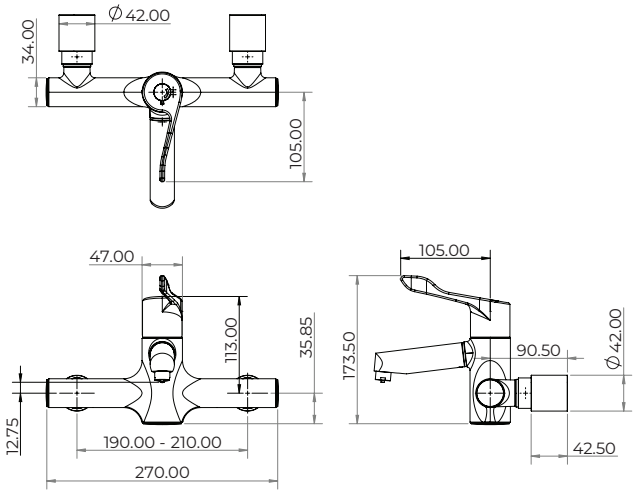

Lead Free
AS 4032.4
Lic WM 74512
ApprovalMark

MVPMLF30150

Thermostatic Mixing Tap

NSW Health Approved Lead Free DZR Brass Wall Mounted Point-of-Use Thermostatic Mixing Tap w/ 150mm Lever

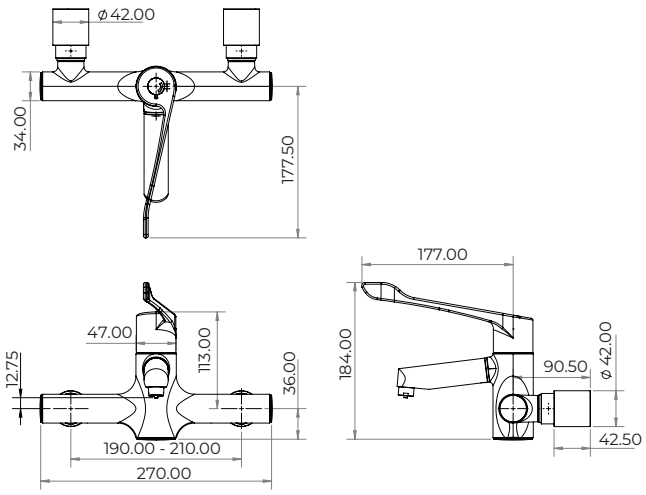

Lead Free
AS 4032.4
Lic WM 74512
ApprovalMark

*Product information is subject to disclaimer within this catalogue.

TEMPSET LEAD FREE BRASS

MVPMLF20100

Thermostatic Mixing Shower

NSW Health Approved Lead Free DZR Brass In-Wall Point-of-Use Thermostatic Mixing Shower w/ 100mm Lever

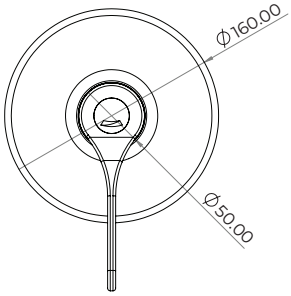

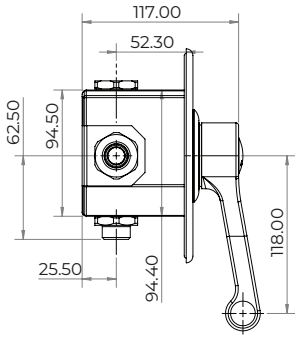

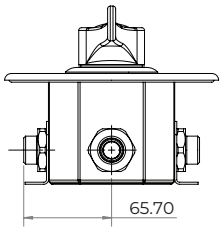

Lead Free
AS 4032.4
Lic WM 74512
ApprovalMark

MVPMLF20AV

Thermostatic Mixing Shower

NSW Health Approved Lead Free DZR Brass Wall Mounted Point-of-Use Thermostatic Mixing Shower w/ Anti-Ligature Handle

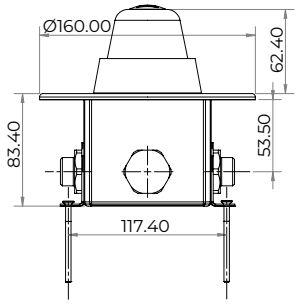

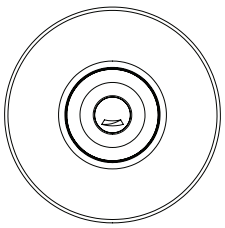

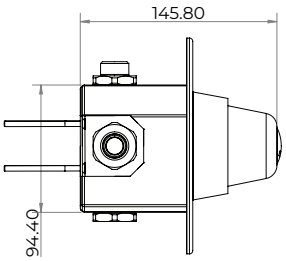

Lead Free
AS 4032.4
Lic WM 74512
ApprovalMark

MVPMLF5000

Thermostatic Electronic Tap

NSW Health Approved Lead Free DZR Brass In-Wall Point-of-Use Thermostatic Mixing Valve w/ Temperature Control Dial, Electronic Tap outlet and In-Wall Stainless Steel Enclosure

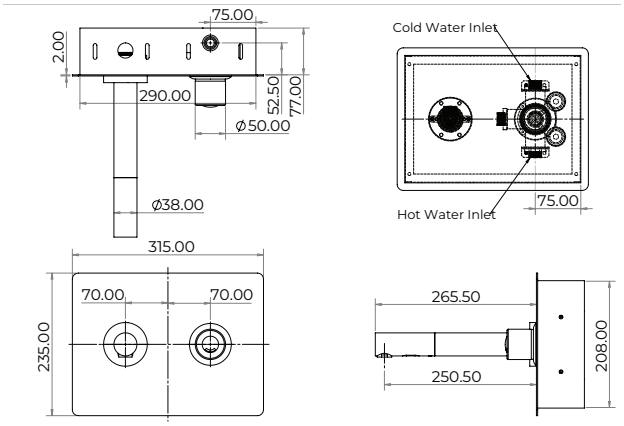

Lead Free
AS 4032.4
Lic WM 74512
ApprovalMark

MVPMLF5250

Thermostatic Mixer

NSW Health Approved Lead Free DZR Brass In-Wall Point-of-Use Thermostatic Mixing Valve w/ 150mm Lever Handle and 250mm Fixed Spout, Complete with In-Wall Stainless Steel Enclosure

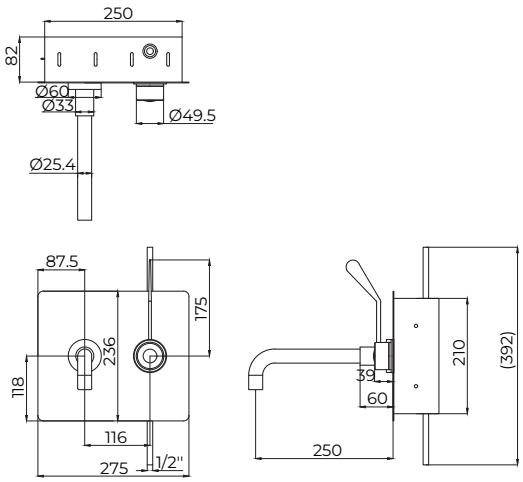

Lead Free
AS 4032.4
Lic WM 74512
ApprovalMark

*Product information is subject to disclaimer within this catalogue.

ANTI-LIGATURE LEAD FREE BRASS

GENTEC offers a range of ANTI-LIGATURE LEAD FREE BRASS Tapware that is designed to prevent self-harm and meet the specific needs of healthcare and mental health facilities. These products feature a unique design that eliminates ligature points, reducing the risk of self-harm. The range is recommended for any facility that requires anti-ligature fixtures, including hospitals, mental health facilities, and correctional facilities.

ANTI-LIGATURE LEAD FREE BRASS

ANTI-LIGATURE TAPWARE

Technical Information

- Material:
  - Body:
    - Zero Lead Stainless Steel 304: AVSS1000
    - Lead Free DZR Brass: AVLF0001, AVLF0025, AVLF0075 & TFTLF6000
  - Handle:
    - Brass: AVLF0001, AVLF0025 & AVLF0075
- Cartridge:
  - Ceramic Disc (Quarter Turn): AVLF0001, AVLF0025 & AVLF0075
  - Timed Flow (Hydraulic): TFTLF6000
- Cartridge Size:
  - 5/8'': AVLF0001, AVLF0025 & AVLF0075
  - 15mm: TFTLF6000
- Inlet:
  - 15mm: AVLF0001, AVLF0025, AVLF0075 & TFTLF6000
  - 15mm Male: AVSS1000
- Flow Style:
  - Free Flow: AVLF0001, AVLF0025, AVSS1000
  - Fixed Shower Spray: AVLF0075
  - Spray Flow: TFTLF6000
- Working Pressures:
  - 50kPa-500kPa: AVLF0001, AVLF0025, AVLF0075 & AVSS1000
  - 150kPa-500kPa: TFTLF6000
- Recommended Working Pressures: 350kPa
- Working Temperatures:
  - 5°C - 60°C: AVLF0001, AVLF0025, AVLF0075 & AVSS1000
  - 5°C - 50°C: TFTLF6000
- Finish:
  - Chrome Plated: AVLF0001, AVLF0025, AVLF0075
  - Polished: AVSS1000

Product Features

- AVLF0001, AVLF0025, AVLF0075:
  - Lead Free Brass
  - Anti-ligature and anti-vandal
  - Anti-rotation pin: AVLF0025
  - Anti-rotation pins on adaptors and outlet: AVLF0001 & AVLF0075
  - Up to 10mm depth adjustment on control valves: AVLF0001, AVLF0025 & AVLF0075
  - All water contacting components comply with less than 0.25% lead: AVLF0025
  - Supplied with cold, warm, hot indicators for each control valve
  - Recommended for projects in Public areas, Detention Centres and Mental Health facilities
  - Gentec can customise products to suit customer requirements
- TFTLF6000:
  - Lead Free Brass
  - Soft-close, hydraulically operated time flow means that it's suitable for all markets
  - Designed to be durable and anti-vandal. Suitable for use in public areas
  - One service kit used across the Flostop range for easy maintenance
  - Supplied with inlet strainer and flow controller
  - Recommended for commercial and public projects
- AVSS1000:
  - Stainless Steel Zero Lead
  - Anti-rotation pin
  - Anti-ligature and anti-vandal
  - Adjustable to suit stainless basins and can be used with benchtops up to 18mm thick
  - Gentec can customise products to suit customer requirements
  - Recommended for projects in Public areas, Detention Centres and Mental Health facilities

*Product information is subject to disclaimer within this catalogue.

ANTI-LIGATURE LEAD FREE BRASS

AVLF0025

Anti-Ligature Tapware

Hob or Wall Mounted Lead Free DZR Brass Control Valve w/ Anti-Ligature and Control Valves

Individually Purchased

AVLF0025: One code can be used for hot, cold or warm.

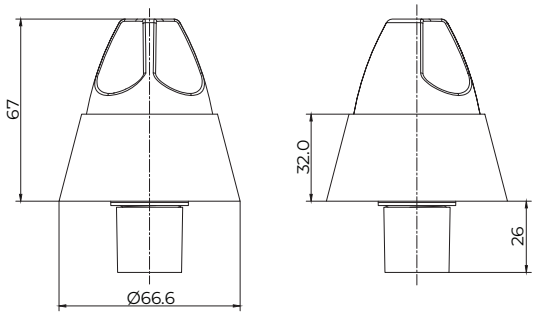

Lead Free
AS 3718
Lic WMKA25617
SAI Global

AVLF0001

Anti-Ligature Tapware

Hob or Wall Mounted Lead Free DZR Brass Basin Set w/ Anti Ligature Outlet and Control Valves

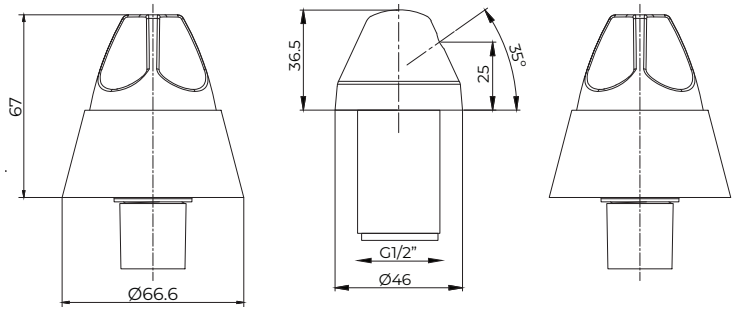

The more stars the more water efficient
WATER RATING
www.waterrating.gov.au
4.0 litres per minute
In accordance with AS/NZS 6400
Licence No. 1334
GENTEC AUSTRALIA

Lead Free
AS 3718
Lic WMKA25617
SAI Global

AVLF0075

Anti-Ligature Tapware

Wall Mounted Lead Free DZR Brass Shower Set w/ Fixed Anti Vandal Showerhead and Control Valves

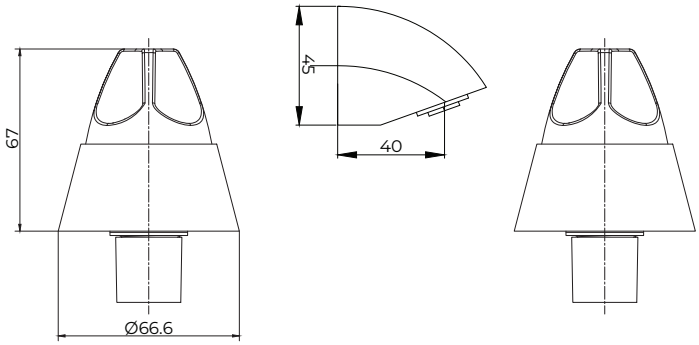

The more stars the more water efficient
WATER RATING
www.waterrating.gov.au
6.0 litres per minute
In accordance with AS/NZS 6400
Licence No. 1334
GENTEC AUSTRALIA

Lead Free
AS 3718
Lic WMKA25617
SAI Global

TFTLF6000

Anti-Ligature Tapware

Lead Free DZR Brass Wall Mounted Spray Showerhead

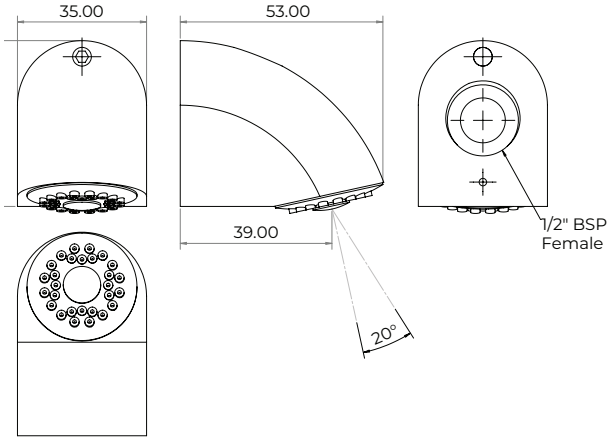

WATER RATING
www.waterrating.gov.au
6.0 litres per minute
In accordance with AS/NZS 6400
Licence No. 1334
GENTEC AUSTRALIA

WaterMark
AS/NZS 3662
Lic WM 74524
ApprovalMark

Lead Free Certification
ApprovalMark International

AVSS1000

Anti-Ligature Tapware

Stainless Steel 304 Anti-Ligature Hob or Wall Mounted Polished Finish Outlet Free Flow

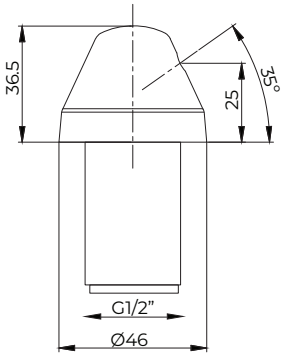

WATER RATING
www.waterrating.gov.au
4.5 litres per minute
In accordance with AS/NZS 6400
Licence No. 1334
GENTEC AUSTRALIA

Lead Free
AS 3718
Lic WM 74827
ApprovalMark

Lead Free Certification
ApprovalMark International

*Product information is subject to disclaimer within this catalogue.

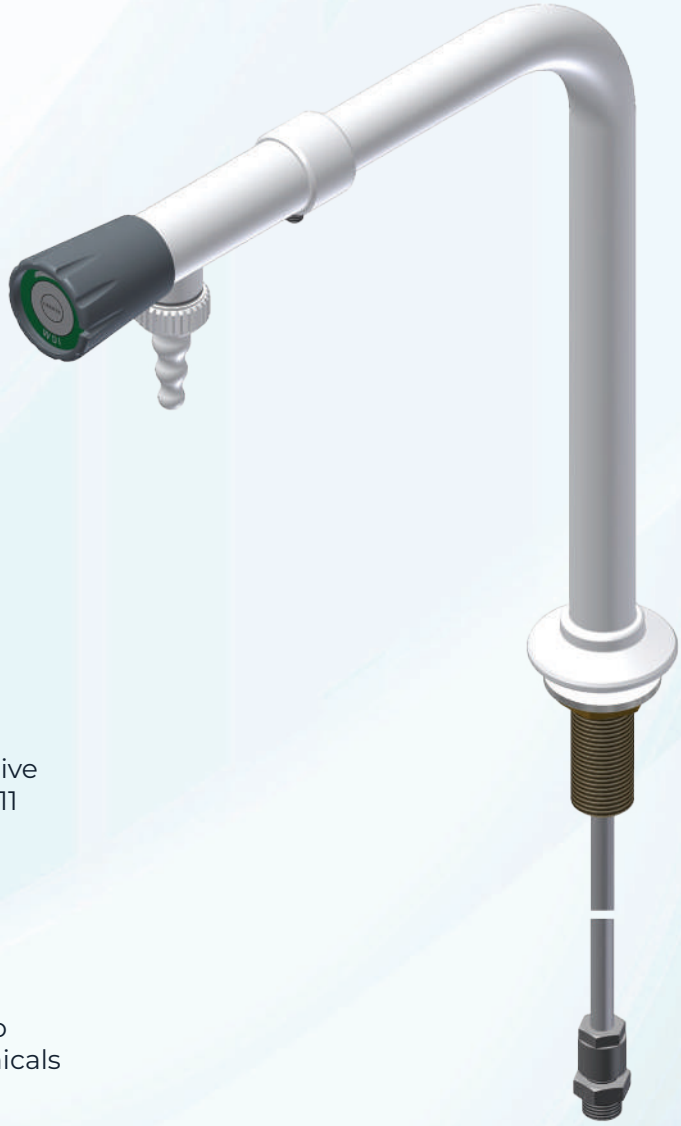

Anti-Corrosive
Polyamide 11
Coating

Resistant to
Base Chemicals

DURALAB

The DURALAB range offers a comprehensive selection of laboratory tapware, designed to meet the water and gas application needs of even the most demanding laboratories. The tapware is ergonomically designed for ease of use, and the range is ideal for science and education projects.

DURALAB

SPECIAL GAS

Technical Information

- **Material:** Brass
- **Cartridge:**
  - Ceramic Disc: DURA301, DURA302, DURA303, DURA1713 & DURA1714
  - Needle Valve: DURA1715 & DURA1716
- **Inlet:**
  - 15mm Male: DURA301, DURA302 & DURA303
  - 8mm Female: DURA1713, DURA1714, DURA1715 & DURA1716
- **Working Pressures:**
  - ≤20kPa: DURA301, DURA302, DURA303, DURA1713 & DURA1714
  - 50kPa - 500kPa: DURA1715 & DURA1716
- **Recommended Working Pressures:**
  - 7kPa: DURA301, DURA302, DURA303, DURA1713 & DURA1714
- **Finish:** Polyamide 11 white (Alternate colours on request)

Product Features

- Anti-corrosive coating is 300microns thick to protect the product from chemical damage
- Resistant to base chemicals
- Nozzles or aerator option: DURA1713, DURA1714, DURA1715 & DURA1716
- Recommended for science and education projects

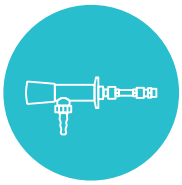

SPECIAL WATER

Technical Information

- **Material:** Polypropylene
- **Cartridge:** Plastic, 1/4 turn ceramic disc
- **Inlet:**
  - 20mm Female: DURA295
  - 8mm Male: DURA298, DURA299
  - 8mm Male: DURA1719
- **Working Pressures:** 50kPa - 400kPa
- **Recommended Working Pressures:** 350kPa
- **Working Temperatures:** 10°C - 48°C
- **Finish:** Polyamide 11 white (Alternate colours on request)

Product Features

- Anti-corrosive coating is 300microns thick to protect the product from chemical damage
- Resistant to base chemicals
- Nozzles or aerator option
- Recommended for science and education projects

*Product information is subject to disclaimer within this catalogue.

SPECIAL GAS

DURA301

Laboratory Tapware

DZR Brass Hob Mounted Laboratory Tap w/ Fixed Tube Nozzle - Gas

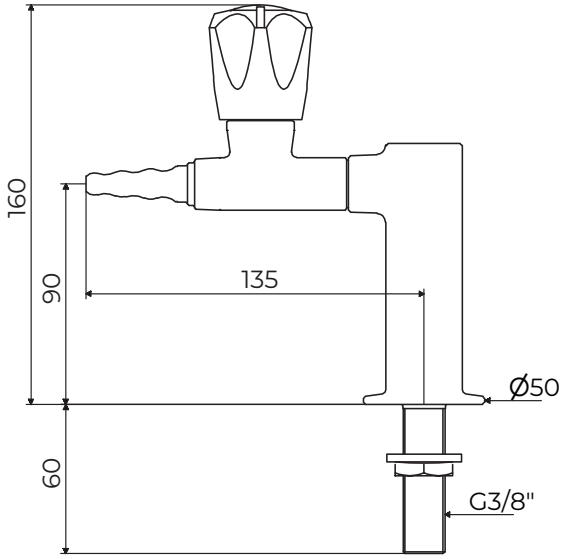

Gas Safety Certified
GAS40068

DURA302

Laboratory Tapware

DZR Brass Hob Mounted Two Way Laboratory Tap w/ at 180 Degree - Detachable Tube Nozzles - Gas

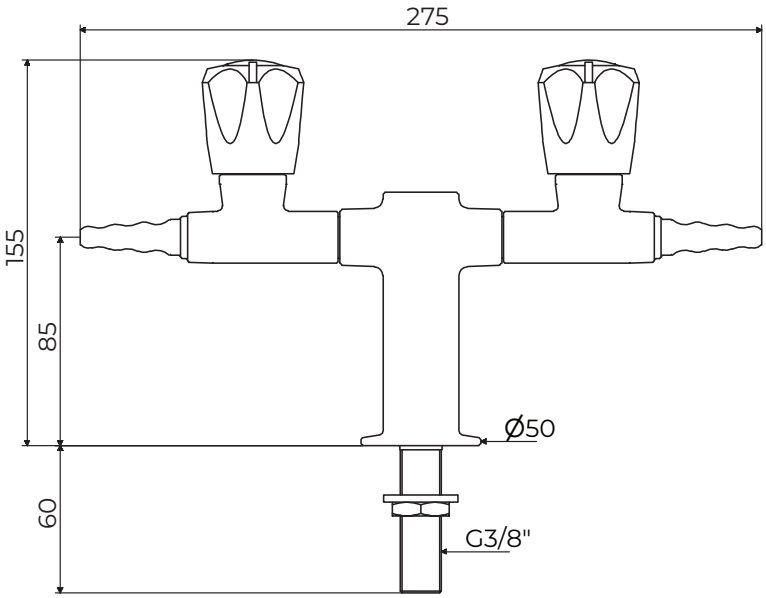

Gas Safety Certified
GAS40068

DURA303

Laboratory Tapware

DZR Brass Hob Mounted Two Way Laboratory Tap w/ at 90 Degree - Detachable Tube Nozzles - Gas

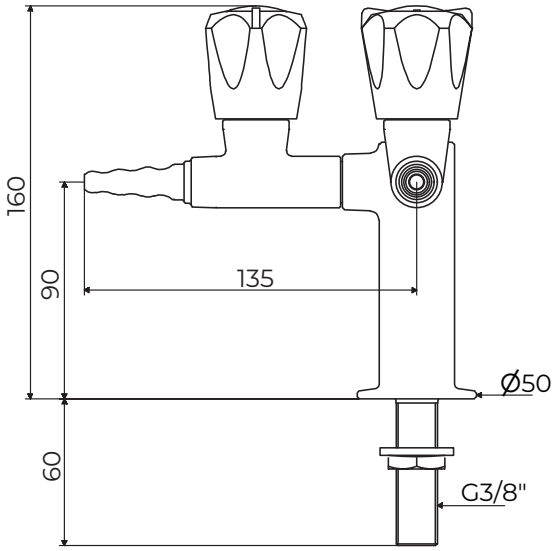

Gas Safety Certified
GAS40068

DURA1713

Laboratory Valve

DZR Brass Hob Mounted Laboratory Control Valve w/ Front Control Valve-Gas

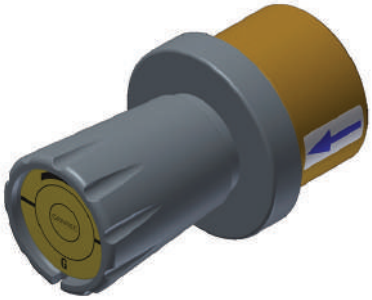

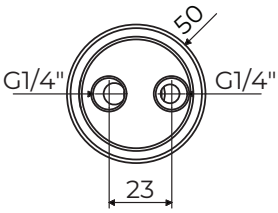

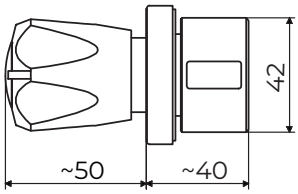

Gas Safety Certified
GAS40068

*Product information is subject to disclaimer within this catalogue.

DURALAB

DURA1714

Laboratory Valve

DZR Brass Hob Mounted Laboratory Control Valve w/ Front Control Valve - Vacuum

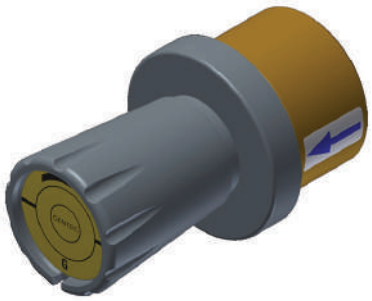

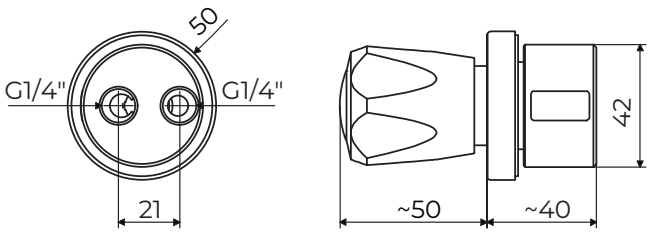

DURA1715

Laboratory Valve

DZR Brass Hob Mounted Laboratory Control Valve w/ Front Control Valve - Compressed Air

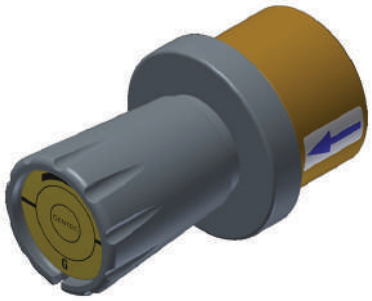

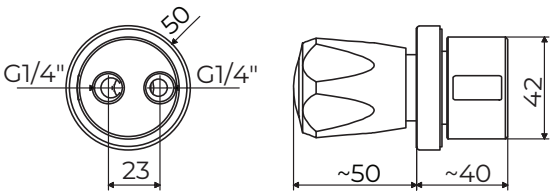

DURA1716

Laboratory Valve

DZR Brass Hob Mounted Laboratory Control Valve w/ Front Control Valve - Other Pressure Gases (Indicates Gas/ Fluid)

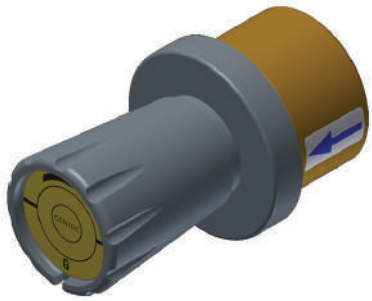

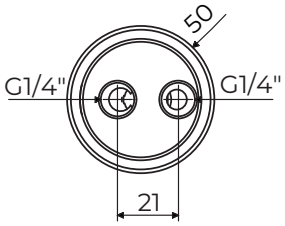

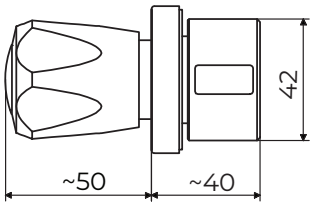

*Product information is subject to disclaimer within this catalogue.

DURALAB

SPECIAL WATER

DURA295

Laboratory Tapware

DZR Brass Hob Mounted Laboratory Tap w/ Detachable Tube Nozzle - Special Water (Single Temperature)

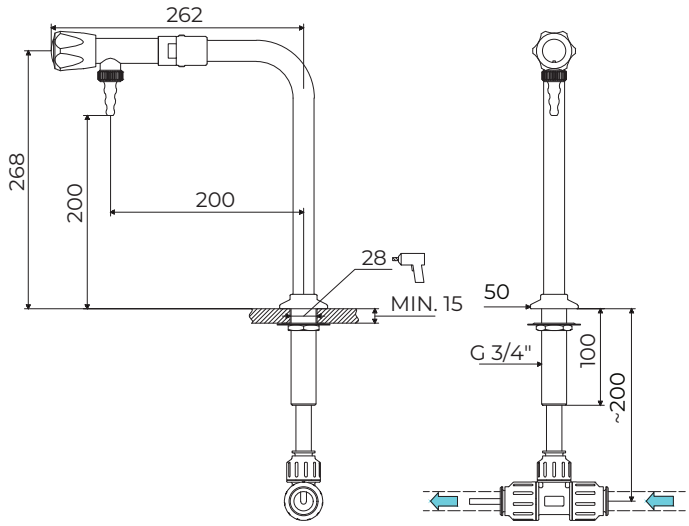

DURA298

Laboratory Tapware

DZR Brass Wall Mounted Laboratory Tap w/ Detachable Tube Nozzle - Special Water (Single Temperature)

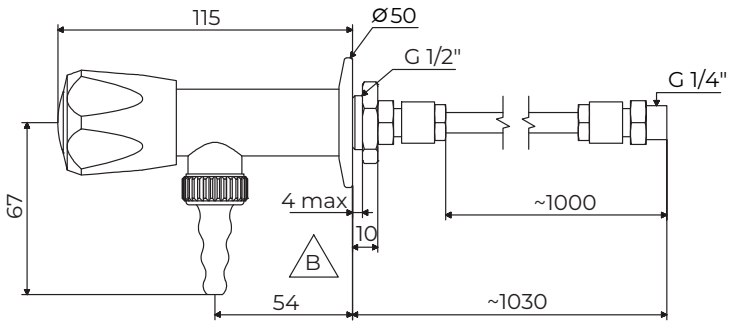

DURA299

Laboratory Tapware

DZR Brass Hob Mounted Laboratory Tap w/ Front Control and Detachable Tube Nozzle - Special Water

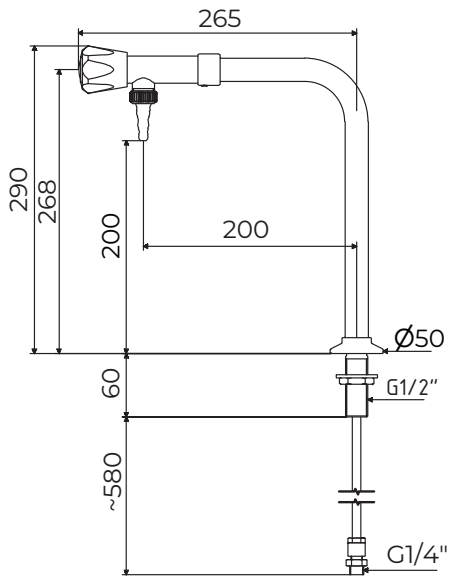

DURA1719

Laboratory Valve

DZR Brass Hob Mounted Laboratory Control Valve w/ Front Control Valve - Special Water

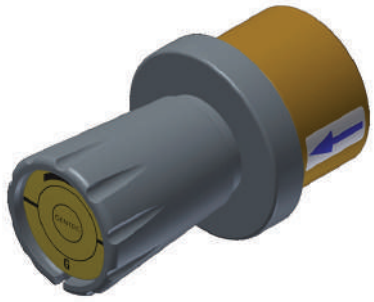

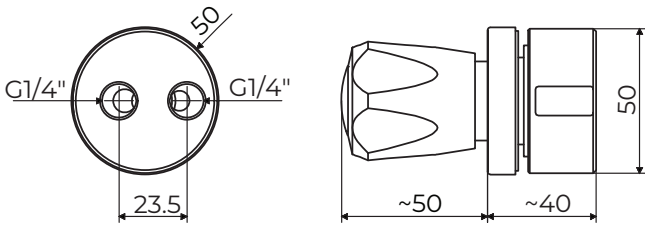

Note: The information provided is only a guide, actual product may differ. The information here should not be relied on without clarification with Gentec. Gentec reserves the right to make design changes at any time without notification. *Subject to terms and conditions, available at https://gentecaustralia.com.au/terms-and-conditions/

Our Locations

AUSTRALIA

Head Office:
Sydney

Unit 6, 20-28 Ricketty Street,
Mascot, NSW 2020, Australia

T: +612 9319 4422
F: +612 8088 7635

info@gentecaustralia.com.au

gentecaustralia.com.au

Other Distribution Locations:
Victoria
South Australia
Queensland
Western Australia
Northern Territory
Tasmania

INTERNATIONAL

New Zealand

Pacific Islands
Fiji
Papua New Guinea

Asia Pacific
Singapore
Hong Kong
Malaysia

Middle East
United Arab Emirates

Europe
United Kingdom

Our Exclusive Distributor

MAR-CATAL-LFBRASS-JT-20261007