USER MANUAL

GPURE® CLEANLINE Stainless Steel Lever Mixing Set

GPure

- **Basin Set -** GPCL10001, GPCL15001, GPCAP0001
- **Sink Set -** GPCL10005, GPCL15005, GPCAP0005
- **Exposed Mixing Set -** GPCL10010, GPCL15010, GPCAP0010, GPCL10012, GPCL15012, GPCAP0012, GPCL10015, GPCL15015, GPCAP0015
- **Recess Mixing Set -** GPCL10035, GPCL15035, GPCAP0035, GPCL10040, GPCL15040, GPCAP0040
- **Control Valves -** GPCL10025 (H, C), GPCL15025 (H, C), GPCAP0025 (H, C), GPCL10030 (H, C), GPCL15030 (H, C), GPCAP0030 (H, C)
- **Washing Machine Tap -** GPCL10045 (H, C), GPCL15045 (H, C), GPCAP0045 (H, C)
- **Cistern Tap -** GPCL10050 (H, C), GPCL15050 (H, C), GPCAP0050 (H, C)
- **Spout -** GPS1000, GPS1500, GPS2000, GPS2500W, GPS3000, GPS4000

The more stars the more water efficient
WATER RATING
www.waterrating.gov.au
6.0 litres per minute
In accordance with AS/NZS 6400
Licence No. 1334
GENTEC AUSTRALIA

The more stars the more water efficient
WATER RATING
www.waterrating.gov.au
7.5 litres per minute
In accordance with AS/NZS 6400
Licence No. 1334
GENTEC AUSTRALIA

Lead Free
AS 3718
Lic WM 74827
ApprovalMark

Lead Free Certification
ApprovalMark International

Disclaimer: Stainless Steel Grade 316 & 304 are manufactured with ZERO Lead.

USER MANUAL

Table of Contents

Scope of Use	2
Technical Information	3
Product Images & Technical Drawings	4
Exploded Drawings	17
Installation Steps	20
Water Quality	24
Troubleshooting	24
Cleaning & Maintenance	26
Responsibly Sourced	26

Scope of Use

Installation of all products should adhere to the manufacturer's guidelines, as well as comply with PCA, AS/NZS3500 standards, and any other relevant regulatory provisions. This product range complies with the Lead Free requirements of the National Construction Code Volume Three.

- **Installation:** Refer to the installation instructions included within this manual
- **Water quality:** In line strainer (supplied) must be installed to ensure water quality
- **Suitable for indoor use only**
- **Temperature recommendation:**
  - Single temperature up to: 50°C
  - Dual temperature up to: 80°C
  - Minimum temperature: 5°C
- **Mounting:** Wall, bench or in line installation

Technical Information

Material	• Main Body and Internal System: Zero Lead Stainless Steel 316 • Cartridge: Zero Lead Stainless Steel 304
Cartridge	Ceramic Disc (Quarter Turn)
Cartridge Size	5/8''
Inlet	• Basin & Sink Sets, Recess Mixing Sets, Control Valves, Washing Machine & Cistern Taps, Spouts: 15mm • Exposed Mixing Sets: (15mm: GPCAP0010, GPCAP0012, GPCL10010, GPCL10012, GPCL10015, GPCL15010 & GPCL15012) (15mm Male: GPCL15015 & GPCAP0015)
Outlet	• Curved Fixed Spout: GPCAP0001, GPCL10001 & GPCL15001 • Curved Swivel Spout: GPCAP0005, GPCL10005, GPCL15005, GPCAP0010, GPCAP0015, GPCL10010, GPCL10015, GPCL15010, GPCL15015, GPCAP0035, GPCL10035 & GPCL15035 • Fixed Parallel Spout: GPCAP0012, GPCL10012, GPCL15012, GPCAP0040, GPCL10040 & GPCL15040 • 20mm Male Outlet: GPCL10045C, GPCL10045H, GPCL15045C & GPCL15045H
Flow Style	• Basin & Sink Sets, Exposed Mixing Sets, Recess Mixing Sets, Control Valves, Spouts: Laminar Flow • Washing Machine & Cistern Taps: Free Flow
Working Pressure	50kPa-500kPa
Manufacturers Recommended Pressure	350 kPa
Working Temperature	5°C - 80°C
Finish	Polished
Servicing	Preventative Maintenance

USER MANUAL

Product Images & Technical Drawings

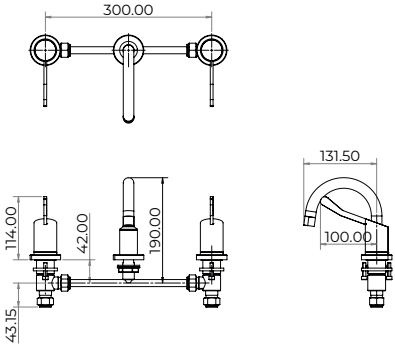

GPCL10001

Zero Lead Stainless Steel 316 Hob Mounted 100mm Lever Basin Set w/ Curved Fixed Spout

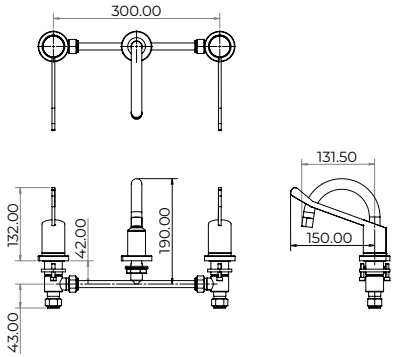

GPCL15001

Zero Lead Stainless Steel 316 Hob Mounted 150mm Lever Basin Set w/ Curved Fixed Spout

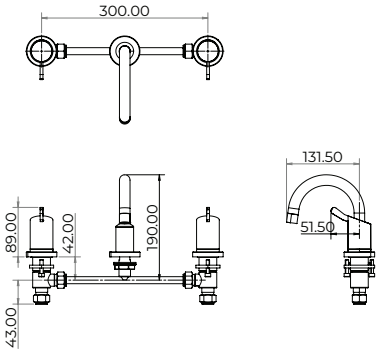

GPCAP0001

Zero Lead Stainless Steel 316 Hob Mounted 25mm Handle Basin Set w/ Curved Fixed Spout

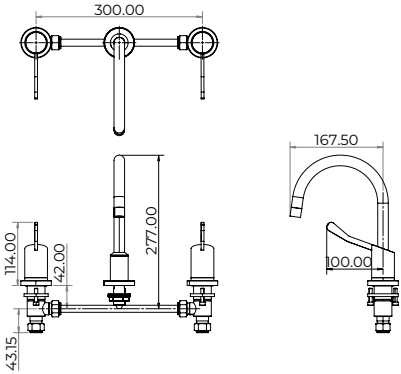

GPCL10005

Zero Lead Stainless Steel 316 Hob Mounted 100mm Lever Sink Set w/ Curved Swivel Spout

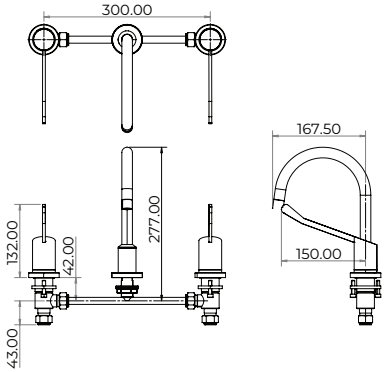

GPCL15005

Zero Lead Stainless Steel 316 Hob Mounted 150mm Lever Sink Set w/ Curved Swivel Spout

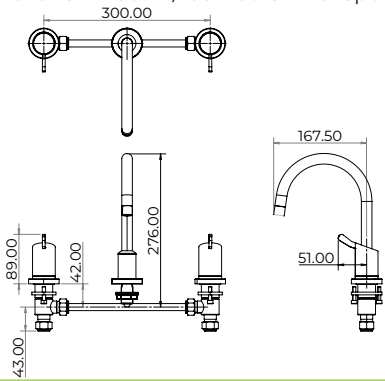

GPCAP0005

Zero Lead Stainless Steel 316 Hob Mounted 25mm Handle Sink Set w/ Curved Swivel Spout

USER MANUAL

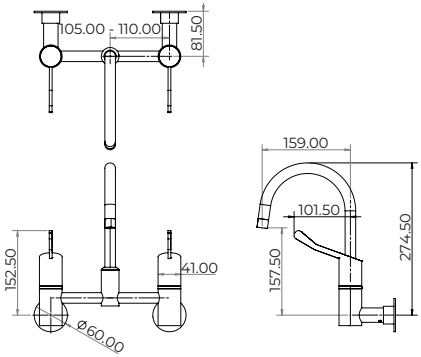

GPCL10010

Zero Lead Stainless Steel 316 Wall Mounted 100mm Lever Exposed Mixing Set w/ Curved Swivel Spout

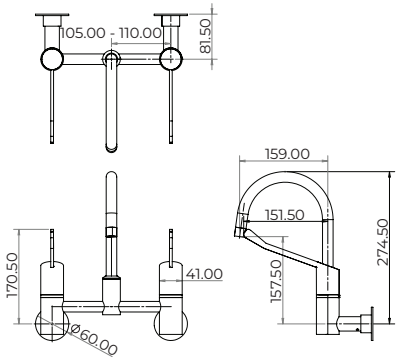

GPCL15010

Zero Lead Stainless Steel 316 Wall Mounted 150mm Lever Exposed Mixing Set w/ Curved Swivel Spout

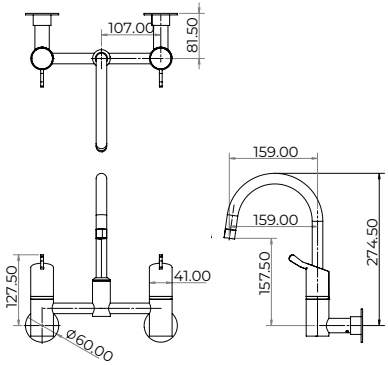

GPCAP0010

Zero Lead Stainless Steel 316 Wall Mounted 25mm Handle Exposed Mixing Set w/ Curved Swivel Spout

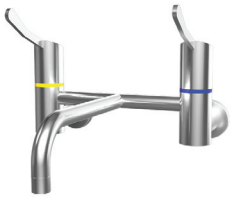

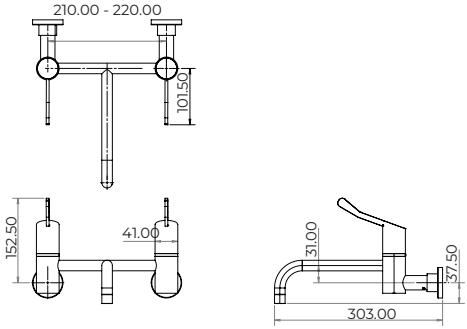

GPCL10012

Zero Lead Stainless Steel 316 Wall Mounted 100mm Lever Exposed Mixing Set w/ Fixed Parallel Spout

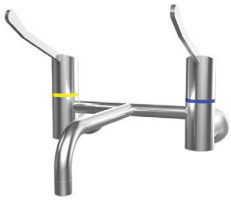

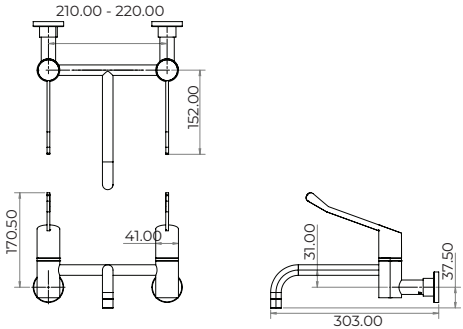

GPCL15012

Zero Lead Stainless Steel 316 Wall Mounted 150mm Lever Exposed Mixing Set w/ Fixed Parallel Spout

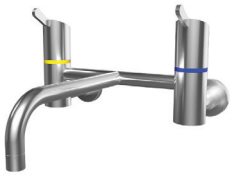

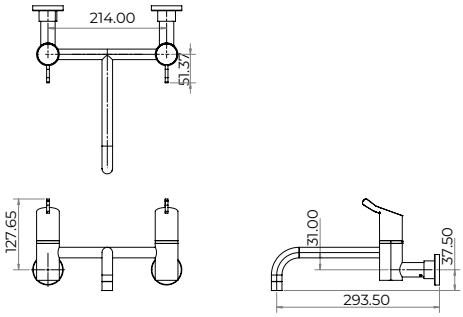

GPCAP0012

Zero Lead Stainless Steel 316 Wall Mounted 25mm Handle Exposed Mixing Set w/ Fixed Parallel Spout

USER MANUAL

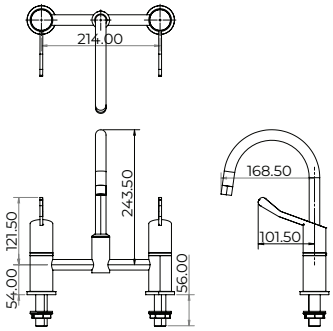

GPCL10015

Zero Lead Stainless Steel 316 Hob Mounted 100mm Lever Exposed Mixing Set w/ Curved Swivel Spout

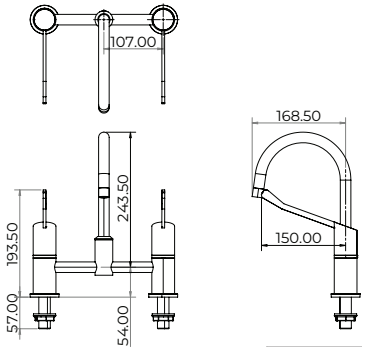

GPCL15015

Zero Lead Stainless Steel 316 Hob Mounted 150mm Lever Exposed Mixing Set w/ Curved Swivel Spout

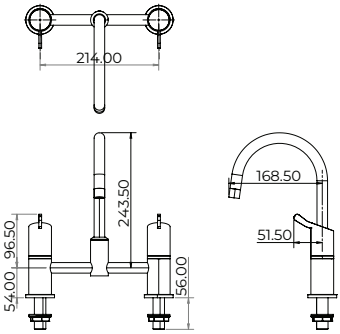

GPCAP0015

Zero Lead Stainless Steel 316 Hob Mounted 25mm Handle Exposed Mixing Set w/ Curved Swivel Spout

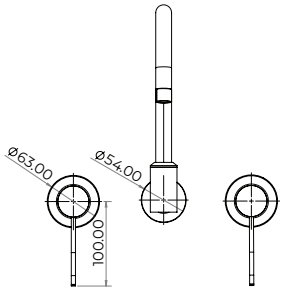

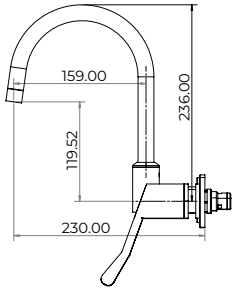

GPCL10035

Zero Lead Stainless Steel 316 Wall Mounted 100mm Lever Recess Mixing Set w/ Gooseneck Swivel Spout

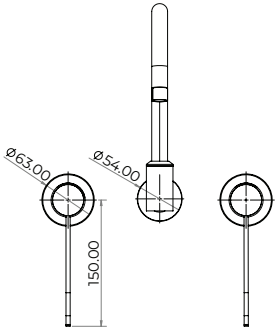

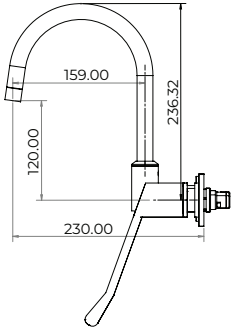

GPCL15035

Zero Lead Stainless Steel 316 Wall Mounted 150mm Lever Recess Mixing Set w/ Gooseneck Swivel Spout

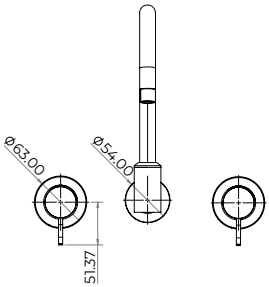

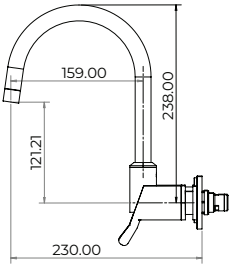

GPCAP0035

Zero Lead Stainless Steel 316 Wall Mounted 25mm Handle Recess Mixing Set w/ Gooseneck Swivel Spout

USER MANUAL

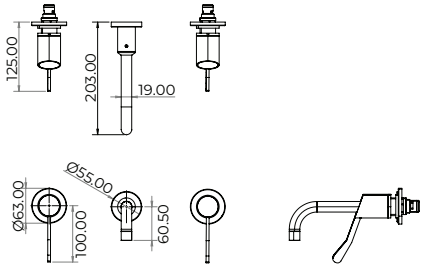

GPCL10040

Zero Lead Stainless Steel 316 In-Wall 100mm Lever Recess Mixing Set w/ Fixed Parallel Spout

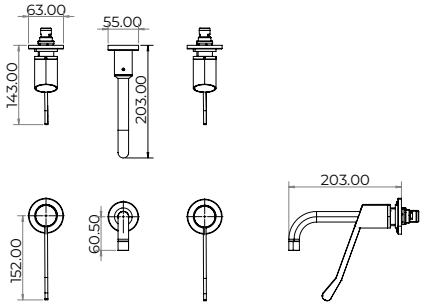

GPCL15040

Zero Lead Stainless Steel 316 In-Wall 150mm Lever Recess Mixing Set w/ Fixed Parallel Spout

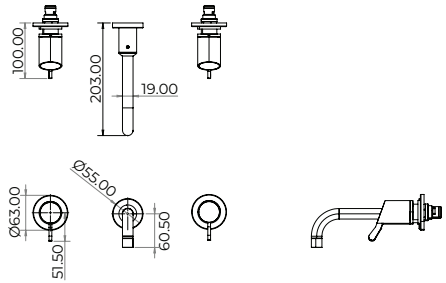

GPCAP0040

Zero Lead Stainless Steel 316 In-Wall 25mm Handle Recess Mixing Set w/ Fixed Parallel Spout

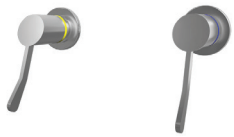

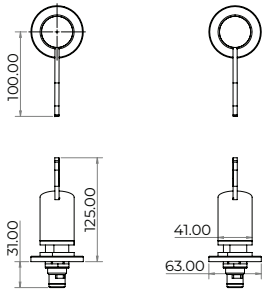

Individually Purchased

- GPCL10025H: Warm
- GPCL10025C: Cold

Hot indicator is available on request.

GPCL10025 (H, C)

Zero Lead Stainless Steel 316 Wall Mounted 100mm Lever Control Valve

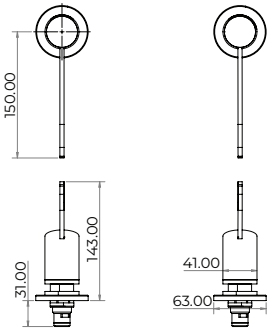

Individually Purchased

- GPCL15025H: Warm
- GPCL15025C: Cold

Hot indicator is available on request.

GPCL15025 (H, C)

Zero Lead Stainless Steel 316 Wall Mounted 150mm Lever Control Valve

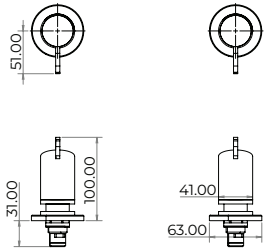

Individually Purchased

- GPCAP0025H: Warm
- GPCAP0025C: Cold

Hot indicator is available on request.

GPCAP0025 (H, C)

Zero Lead Stainless Steel 316 Wall Mounted 25mm Handle Control Valve

USER MANUAL

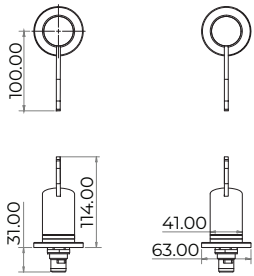

Individually Purchased

- GPCL10030H: Warm
- GPCL10030C: Cold

Hot indicator is available on request.

GPCL10030 (H, C)

Zero Lead Stainless Steel 316 Hob Mounted 100mm Lever Control Valve

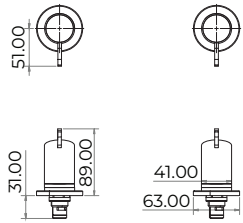

Individually Purchased

- GPCL15030H: Warm
- GPCL15030C: Cold

Hot indicator is available on request.

GPCL15030 (H, C)

Zero Lead Stainless Steel 316 Hob Mounted 150mm Lever Control Valve

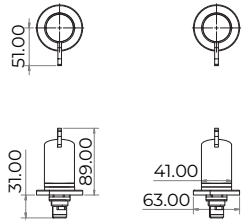

Individually Purchased

- GPCAP0030H: Warm
- GPCAP0030C: Cold

Hot indicator is available on request.

GPCAP0030 (H, C)

Zero Lead Stainless Steel 316 Hob Mounted 25mm Handle Control Valve

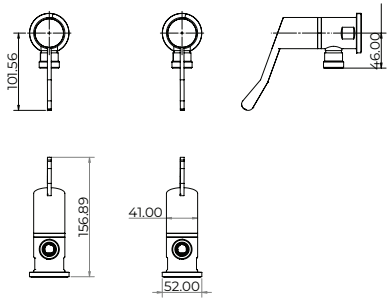

Individually Purchased

- GPCL10045H: Warm
- GPCL10045C: Cold

Hot indicator is available on request.

GPCL10045 (H, C)

Zero Lead Stainless Steel 316 Wall Mounted 100mm Lever Washing Machine Tap w/ 20mm Male Outlet

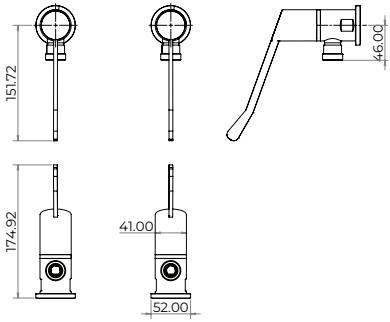

Individually Purchased

- GPCL15045H: Warm
- GPCL15045C: Cold

Hot indicator is available on request.

GPCL15045 (H, C)

Zero Lead Stainless Steel 316 Wall Mounted 150mm Lever Washing Machine Tap w/ 20mm Male Outlet

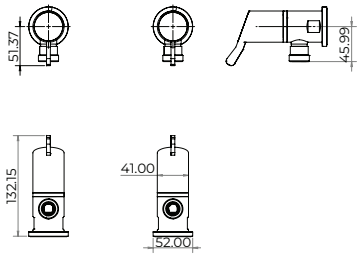

Individually Purchased

- GPCAP0045H: Warm
- GPCAP0045C: Cold

Hot indicator is available on request.

GPCAP0045 (H, C)

Zero Lead Stainless Steel 316 Wall Mounted 25mm Handle Washing Machine Tap

USER MANUAL

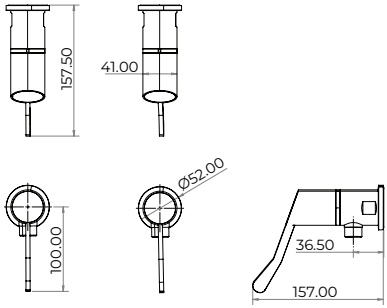

Individually Purchased

- GPCL10050H: Warm
- GPCL10050C: Cold

Hot indicator is available on request.

GPCL10050 (H, C)

Zero Lead Stainless Steel 316 Wall Mounted 100mm Lever Cistern Tap

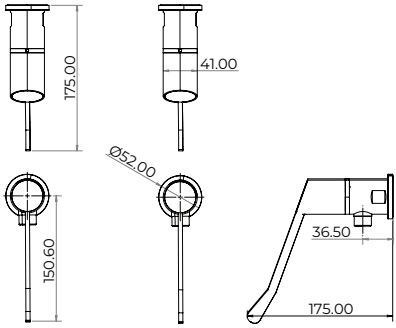

Individually Purchased

- GPCL15050H: Warm
- GPCL15050C: Cold

Hot indicator is available on request.

GPCL15050 (H, C)

Zero Lead Stainless Steel 316 Wall Mounted 150mm Lever Cistern Tap

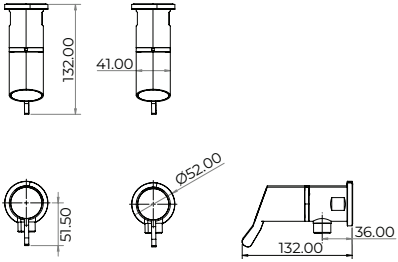

Individually Purchased

- GPCAP0050H: Warm
- GPCAP0050C: Cold

Hot indicator is available on request.

GPCAP0050 (H, C)

Zero Lead Stainless Steel 316 Wall Mounted 25mm Handle Cistern Tap

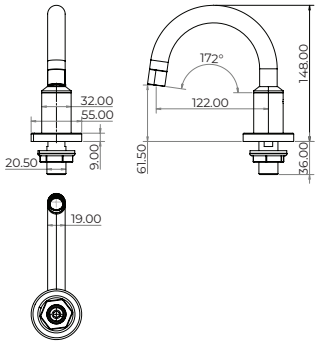

GPS1000

Zero Lead Stainless Steel 316 Hob Mounted Fixed Basin Spout

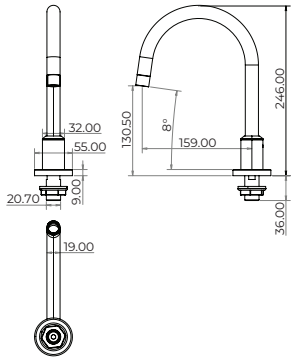

GPS1500

Zero Lead Stainless Steel 316 Hob Mounted Swivel Gooseneck Sink Spout

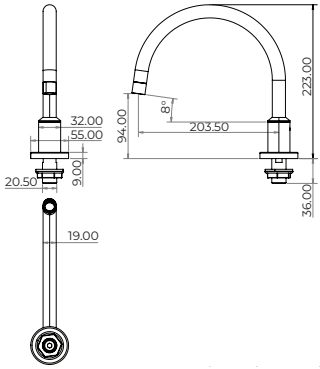

GPS2000

Zero Lead Stainless Steel 316 Hob Mounted Swivel Gooseneck Sink Spout

USER MANUAL

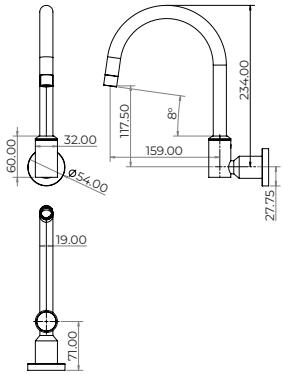

GPS2500W

Zero Lead Stainless Steel 316 Wall Mounted Swivel Gooseneck Sink Spout

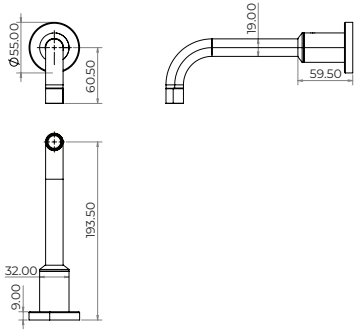

GPS3000

Zero Lead Stainless Steel 316 Wall Mounted Fixed Straight Spout

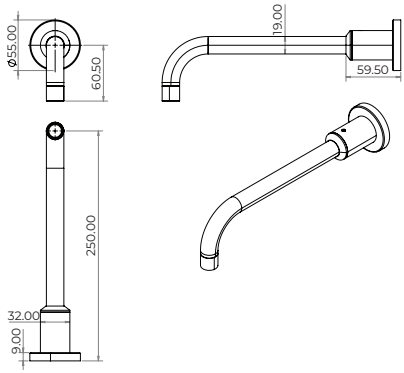

GPS4000

Zero Lead Stainless Steel 316 Wall Mounted Fixed Straight Spout

Note: Dimensions are provided as a guide and are subject to manufacturing tolerances.

Exploded Drawings

GPCL15010 & GPCL10010

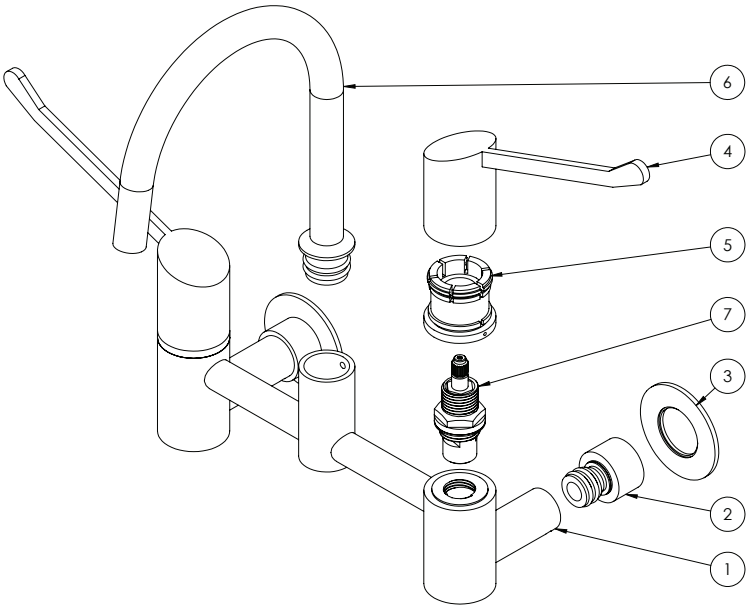

Item#	Description	Qty	Spare Parts
1	Mixer Body	1	☐
2	Push Fit Wall Mount	2	☐
3	Flange	2	☐
4	Handle	2	☑
5	Coloured Bush	2	☐
6	Spout	1	☐
7	Cartridge	2	☑

USER MANUAL

GPCL15015 & GPCL10015

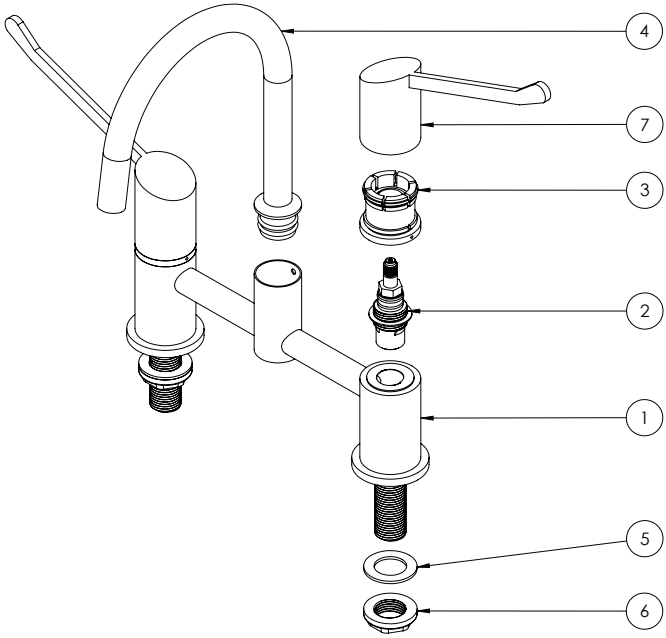

Item#	Description	Qty	Spare Parts
1	Mixer Body	1	☐
2	Cartridge	2	✓
3	Coloured Bush	2	☐
4	Spout	1	☐
5	Rubber Washer	2	☐
6	Fixing Nut	2	☐
7	Handle	2	✓

GPCAP0025, GPCL10025 and GPCL15025

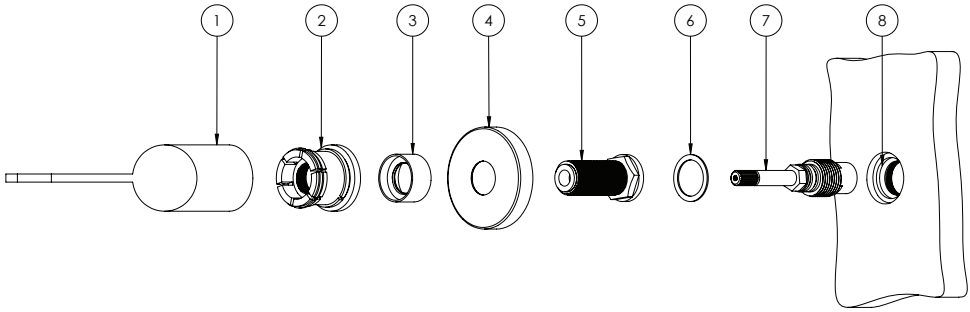

Item#	Code	Description	Qty	Spare Parts
1	GPCL15/GPCL10	Handle	1	✓
2		Plastic Bush	1	
3		Locking Sleeve	1	
4		Flange	1	
5	GPCL9001H GPCL9001C	Spindle Nut	1	
6		Fiber Washer	1	
7		Spindle	1	
8		Wall Thread	1	

Installation Steps

HANDLE INSTALLATION (FOR ALL UNITS)

Note: The handles can be installed prior to or after the installation of the tap body, provided water supply to the inlet is turned off.

Step 1. Place the handle and locking bush on top of the cartridge. Ensure that the handle and cartridge are both in the same position (fully on or fully off).

Step 2. Align the cartridge spline in the correct position to the handle lever & turn the locking bush clockwise to fasten.

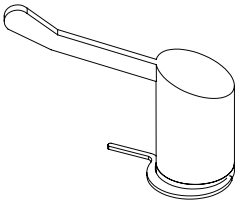

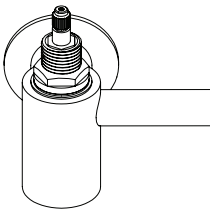

Step 3. Position the tool as seen in the image below, and rotate clockwise to tighten.

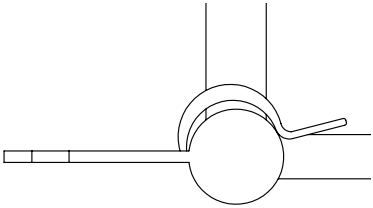

Step 4. Move the handles to the off position.

WALL MOUNTED INSTALLATION - GPCL10010, GPCL15010, GPCL10012, GPCL15012

Before Installation
Ensure that the water supply to the inlet is turned off.
NOTE: Ensure all O-Rings are well lubricated with food grade lubricant before assembly.

Important Information
The female thread for the wall mounted piece is intentionally off-centre to assist with adjusting the centre distance **(Centre distance adjustment range 210-220mm)**.

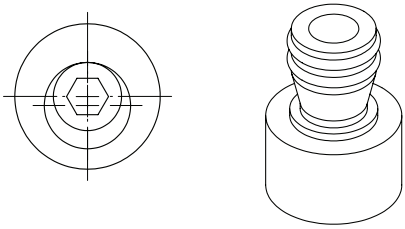

Step 1. Apply adequate Teflon tape to the two 1/2" BSP threads. Place the flange over the thread and screw the wall mounts onto the threads using an Allen key to ensure the fittings are tight and in-line with the centre distance of the tap.

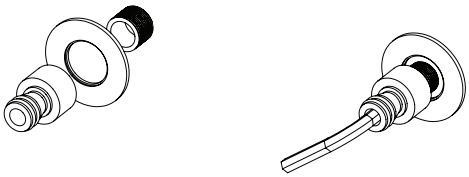

Step 2. Push fit the body onto the fittings. If the body does not fit easily, adjust the wall fittings slightly until the body fits.
Secure the body with the four grub screws provided.

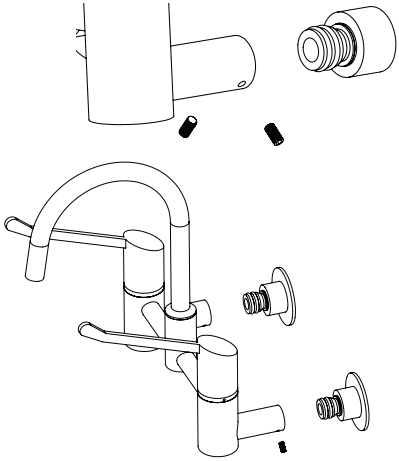

Step 3. Turn on the water supply. Check for leaks and activate hot and cold handles on the tap to verify operation.

USER MANUAL

BENCH MOUNTED INSTALLATION - GPCL10015 & GPCL15015

Before Installation
Ensure that the water supply to the inlet is turned off.

Step 1. At the desired location for the tap installation, mark out and drill two holes (20-25mm in diameter) 215mm apart.

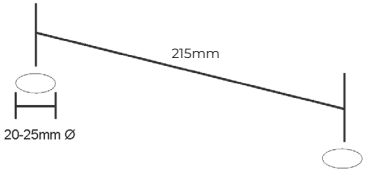

Step 2. Place the tap into the pre-drilled holes with the 1/2" BSP threads going in first (ensure the cover flanges are in place).

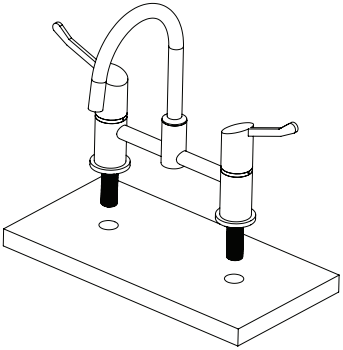

Step 3. From beneath the bench, push the rubber washers onto the 1/2" BSP threads. Secure the tap in place by tightening the nuts on each thread.

Step 4. Connect the tap to the water supply and check for leaks. Activate the hot and cold handles to verify the tap's operation.

INSTALLATION FOR GPCAP0025, GPCL10025 and GPCL15025

Step 1. Ensure the water supply is turned off.

Step 2. Remove the existing tapware.

Step 3. Flush the water lines to remove any debris.

Step 4. Removing the locking nut from both the hot & cold spindles, ensuring the correct direction (clockwise/anticlockwise) for handle rotation.

Step 5. Screw in both spindles into the wall breech and hand tighten until it touches the tap seat.

Step 6. Gently tighten the spindles with a spanner but do not over-tighten.

Step 7. Place the fiber washer over the spindle and screw on the locking nut, tightening firmly.

Step 8. Place the wall flanges over the spindles; if the breech depth is insufficient a trouble dome can be used.

Step 9. Screw the locking sleeves onto the spindles until they're firmly against the flanges.

Step 10. Install the handles onto the spindles as per the instructions on page 20.

Water Quality

Maximum chloride Cl- level Guidelines in plumbing systems

	Cold Water	Hot Water
Grade 304L	200	50
Grade 316L	1000	250

When materials may be used in either hot or cold water lines, the guidelines for hot water should be used.

Within these guidelines at ambient temperatures and provided the pH >~6, any negative effect to stainless steel will be unlikely.

Note: Chlorides in water - where the density of the solvent (water) is 1 (which it is to within 0.1% at ambient temperatures), then mg/L = ppm.

Chlorine guidelines (not to be confused with chloride)

- 316L suitable for chlorine levels up to 5ppm.
- Short term dosing, for example 25-50ppm, for sterilisation purposes of 24-48 hours acceptable if effectively flushed through afterwards.
- Sterilisation is essential during commissioning of potable water systems.

Reference: https://www.assda.asn.au/component/content/article?id=271:chlorine-and-chloride--same-element,-very-different-effect

For brass products, please ensure the chlorine and chloramines levels are not more than 0.4 ppm.

Please ensure that the water quality supplied to the fixtures meets safe drinking standards to prevent potential staining of the product.

Troubleshooting

Problem	Cause	How to Fix
Tap is not shutting off	• Debris • High pressure	• Have you flushed the water line for a minimum of 1 minute before connecting the water • Have you installed the strainer and flow controller if provided • If debris has gone through the cartridge this is more than likely to be the cause. If the ceramic disc is broken or damaged, then the cartridge must be replaced • Ensure cartridge is seated in position • Have you checked to make sure the pressure is to manufacturer's recommendations and in line with the plumbing code
No water	• Isolating valve is off	• Ensure the isolating valve is turned on

Problem	Cause	How to Fix
Handle is in the wrong direction	• Not fitted correctly	• Ensure the cartridge is installed and the tap is in off position before installing the handle in position. Then locate where you want the handle to be located using the spline as the guide.
How do I fix the handle onto the spindle	• (GPCL Taps only) No fixing screw	• If you have the correct indictor bush on the handle, then place the handle over the spindle and align the spline to the desired operating position and screw/turn the colour indicator using the key provided until it reaches the bottom. • Alternatively, you can use the key provided to secure the handle in position.
Issue with water flow	• Not enough water • Too much / little water	• Check for blockage in the inlet where the strainer is fitted or is the aerator blocked with debris • Is the isolating valve fully open on both hot and cold • Have got these in a bank, if so, is the inlet pipes been sized correctly • Has the flow control been installed • High pressure exceeding the plumbing code will have an effect on the product must not exceed 500kPa
Not enough water	• Taps installed in a bank or a trough	• Ensure the main pipe size is sized correctly to ensure adequate water is able to service the taps installed in a bank or a trough
Cross connection of hot and cold	• Is your pressure equal	• Ensure you have adequate or equal pressure on both hot and cold side
The tap is not level on the wall	• Is the issue with an exposed mixing set	• This product comes with a concentric wall based which allow for adjustment on the wall, it must be levelled out during install
My spout is fixed	• Swivel • 180 deg • Fixed	• The spout allows for adjustment to have the three options in one design. By screwing in or unscrewing the screw, you can achieve the three options with the stainless range
How often do I need to service my tap	• Prevent product failure	• Service and maintenance of the main operating parts is recommended as this will prolong the life of the product

Cleaning & Maintenance

To minimise downtime and maximise the functional life of the product, GENTEC recommends servicing your product at least every 12 months, under heavy use may need to be checked and serviced more often.

- The product must be handled carefully to avoid causing any physical damage.
- Use the product at least once every week to ensure all parts are kept lubricated and functioning properly.
- Service the product at least once a year to avoid any product failures - The service timeline provided is based on normal use. More frequent servicing may be required for heavy usage.
- A working pressure of 350kPa is highly recommended to ensure the maximum up-time of the product.
- Regularly clean the product with a soft cloth with warm soapy water, wash off with warm water and dry off with a soft dry cloth, paying attention to removing the dust and contamination in the bends and joints is highly recommended.
- Abrasives, hard clothes, strong acids, and bleaches must be avoided when cleaning all GENTEC products.
- Installation must be completed by a qualified and licenced plumber and adhere to AS/NZS3500 and manufacturer's recommendations.

Parts	Product Name
GPCL10	GPURE® Cleanline S/S handle 100mm
GPCL15	GPURE® Cleanline S/S handle 150mm
GPCL9000C	GPURE® Cleanline S/S Cartridge anti-clockwise to operate
GPCL9000H	GPURE® Cleanline S/S cartridge clockwise to operate

Responsibly Sourced

Reduce Carbon Footprint
GENTEC is rejuvenating the product- no power, less maintenance and longer life.

Rejuvenation Program
To learn more about the rejuvenation program, please contact our customer service at info@gentecaustralia.com.au for more information.

Ethically and Environmentally Sourced
Please refer to GENTEC Business Ethics & Ethical Sourcing Policy at https://gentecaustralia.com.au/terms-and-conditions/

A: Unit 6, 20-28 Ricketty St,
Mascot, Sydney, NSW 2020

E: info@gentecaustralia.com.au

P: +612 9319 4422

F: +612 8088 7635

Gentec products come with a Manufacturer's Warranty. To ensure the validity of this warranty, Gentec products must be installed following the provided installation instructions and adhering to AS 3500, NCC Volume Three, relevant Australian Standards, and any local authority requirements applicable to the product. Additionally, water and electrical supply conditions must meet the appropriate national and/or state standards. Non-compliance with these provisions may void the warranty and impact product performance.

Note: The information provided is only a guide, actual product may differ. The information here should not be relied on without clarification with Gentec. Gentec reserves the right to make design changes at any time without notification.

*Subject to terms and conditions. For detailed warranty information, installation compliance, maintenance and cleaning guidelines, and other relevant details, please visit https://gentecaustralia.com.au